PXIe-1083 User Manual

2026-11-11

Contents

PXIe-1083 User Manual 4
Getting Started 5
Unpacking 5
PXIe-1083 Kit Contents 5
Key Features 6
High Performance for Instrumentation Requirements 6
High Reliability 6
Optional Features. 6
Chassis Components. 7
Optional Equipment 8
EMC Filler Panels 8
Slot Blockers 8
Handle and Feet Kit 8
Rack Mount Kits 8
Replaceable Fan Kit 9
PXIe-1083 Backplane Overview 10
Interoperability with CompactPCI 10
MXI Interface 10
Basic MXI-Express Thunderbolt Systems 11
Thunderbolt Bus Extension 11
Backwards Compatibility 11
Hybrid Peripheral Slots. 12
PXI Local Bus 12
PXI Trigger Bus 13
System Reference Clock 14
Installation and Configuration 15
Safety Information 15
Chassis Cooling Considerations 16
Providing Adequate Clearance 16
Chassis Ambient Temperature Definition 18
Setting Fan Speed 19
Rack Mounting 19

Connecting the Safety Ground 20
Connecting to a Power Source 21
Cabling 21
Powering On/Off the MXI-Express Thunderbolt System 22
Installing Peripheral Modules 23
LED Indicators 24
LINK LED 24
Status LED 24
DIP Switches 25
Inhibit Mode 27
Fan Mode 27
Cooling Profiles 28
Fan Mode Selection 28
PXI Express System Configuration with MAX 29
Trigger Configuration in MAX 30
Fan Configuration in MAX 32
Using System Configuration and Initialization Files 32
Maintenance 34
Service Interval 34
Preparation 34
Maintaining Forced-Air Cooling 34
Installing PXI Slot Blockers 36
Installing PXI Filler Panels 37
Cleaning 39
Interior Cleaning 40
Exterior Cleaning 40
Related Documentation 41

PXIe-1083 User Manual

The PXIe-1083 User Manual provides detailed descriptions of the product functionality and the step by step processes for use.

Looking for Something Else?

For information not found in the User Manual for your product, such as specifications and API reference, browse *Related Information*.

Related information:

- PXIe-1083 Specifications
- Software and Driver Downloads
- License Setup and Activation
- Dimensional Drawings
- Product Certifications
- Letter of Volatility
- Discussion Forums
- NI Learning Center
- NI Support

Unpacking

Carefully inspect the shipping container and the chassis for damage. Check for visible damage to the metal work. Check to make sure all handles, hardware, and switches are undamaged. Inspect the inner chassis for any possible damage, debris, or detached components. If the chassis was damaged during shipment, file a claim with the carrier. Retain the packing material for possible inspection and/or reshipment.

PXIe-1083 Kit Contents

Identify the contents of the PXIe-1083 kit.

The PXIe-1083 chassis kit contains the following items:

- PXIe-1083 chassis
- Filler panel
- Software with *PXI Platform Services 17.3* or newer
- Chassis number labels
- Documentation

You also need an AC power cable, sold separately. Refer to the following table for more information about AC power cables.

Table 1. AC Power Cables

Power Cable	**Reference Standards**
Standard 120 V (USA)	ANSI C73.11/NEMA 5-15-P
Switzerland 220 V	SEV 6534-2
Australia 240 V	AS C112
Universal Euro 230 V	CEE (7), II, IV, VII
United Kingdom 230 V	BS 1363
Japan 100 V	JIS 8303

If you miss any of the items or have the incorrect AC power cable, contact NI.

Key Features

The PXIe-1083 chassis combines a high-performance 5-slot PXI Express backplane with a power supply and a structural design that has been optimized for maximum usability in a wide range of applications. The PXIe-1083 chassis fully complies with the *PXI-5 PXI Express Hardware Specification.*

The key features of the PXIe-1083 chassis include the following:

High Performance for Instrumentation Requirements

- Two integrated Thunderbolt 3 MXI-Express ports
- Up to 500 MB/s (single direction) per PXI Express slot dedicated bandwidth (x1 Gen-2 PCI Express)
- 58 W per slot cooling meets increased PXI Express cooling requirements; refer to the *PXIe-1083 Specifications* for more details
- Low-jitter internal 10 MHz reference clock for PXI/PXI Express slots with ± 25 ppm stability
- Low-jitter internal 100 MHz reference clock for PXI Express slots with ± 25 ppm stability
- Quiet operation for 0 °C to 30 °C at 33.7 dBA
- Variable speed fan controller optimizes cooling and acoustic emissions
- Complies with PXI and CompactPCI specifications

High Reliability

- 0 °C to 50 °C temperature range
- Power supply, temperature, and fan monitoring
- Field replaceable fans

Optional Features

- Front and rear rack-mount kits
- EMC filler panels
- Slot blockers for improved cooling performance
- Factory installation services

- Handle and rubber feet kit
- Fan replacement kit

Chassis Components

The following figures show key features of the PXIe-1083 chassis front and back panels.

Figure 1. Front View of the PXIe-1083

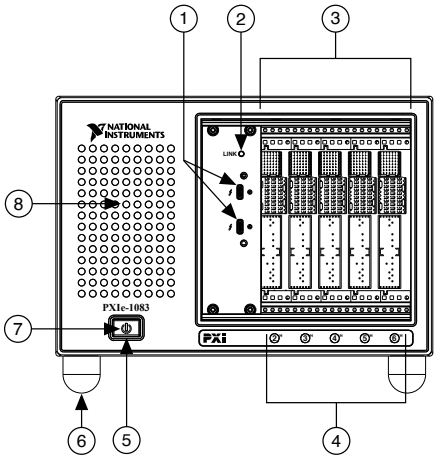

1. Thunderbolt 3 MXI-Express Ports
2. LINK LED
3. Backplane Connectors
4. PXI Express Hybrid Peripheral Slots (5x)
5. Power Inhibit Switch
6. Removable Feet
7. Status LED
8. Power Supply Airflow Intake Vents

Figure 2. Rear View of the PXIe-1083

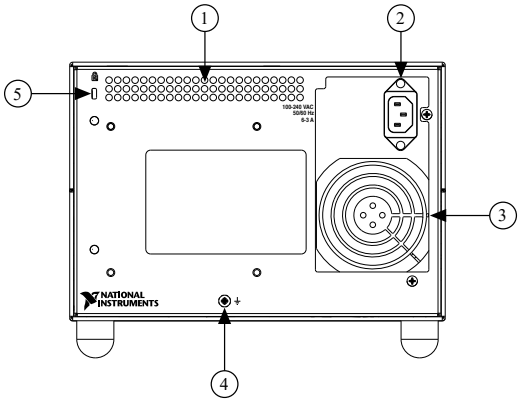

1. Rear Exhaust Vent
2. Universal AC Input
3. Power Supply Fan Exhaust
4. Chassis Grounding Terminal
5. Kensington Slot

Optional Equipment

Contact NI to order the following options for the PXIe-1083 chassis.

- **EMC Filler Panels**—EMC filler panel kits are available from NI.
- **Rack Mount Kits**—Rack mounting kits are available from NI that can accommodate a variety of rack depths.
- **Slot Blockers**—PXI Slot Blocker kits are available from NI for improved thermal performance when all slots are not used.
- **Replacement Power Supply**—Replacement power supply kits are available from NI.
- **Replacement Fan Kit**—A fan kit available from NI includes both side and PXI module fan assemblies.

EMC Filler Panels

EMC filler panel kits are available from NI.

Slot Blockers

PXI Slot Blocker kits are available from NI for improved thermal performance when all slots are not used.

Handle and Feet Kit

An optional side handle and rubber feet kit is available from NI to provide portability.

Rack Mount Kits

Rack mounting kits are available from NI that can accommodate a variety of rack

depths.

Replaceable Fan Kit

A fan kit is available from NI.

Interoperability with CompactPCI

The design of the PXIe-1083 provides you the flexibility to use the following devices in a single PXI Express chassis:

- PXI Express compatible products
- CompactPCI Express compatible Type-2 peripheral products
- PXI peripheral products modified to fit in a hybrid slot
- Standard CompactPCI peripheral products modified to fit in a hybrid slot

MXI Interface

The PXIe-1083 chassis has a built-in Intel Thunderbolt 3 interface accessible through two Thunderbolt 3 ports on the front of the chassis. This enables control of the PXIe-1083 from a host PC that includes a Thunderbolt 3 port and is running a native (nonvirtualized) operating system that supports Thunderbolt connectivity.

Note The PXIe-1083 chassis does not include a slot 1; the Thunderbolt 3 ports replace this slot.

Thunderbolt technology is transparent to device drivers, so no additional software is needed for CompactPCI Express-level support for PXI Express devices in connected chassis.

Note For full PXI/PXI Express functionality such as chassis and controller identification, trigger routing, and slot detection, install the latest version of PXI Platform Services. This software is included with your kit; you also can find it at ni.com/downloads by searching for PXI Platform Services.

The link between the PC and the chassis is a Thunderbolt 3 link. This link is a dual-simplex communication channel comprised of differentially driven signal pairs. The link can transmit at a rate of up to 40 Gbps in each direction simultaneously. The Thunderbolt 3 interface connects to the PXI Express backplane through a Gen-2 x4 link to a PCI Express switch that fans out PCI Express links to the peripheral slots. This

provides a nominal single direction data rate of 2 GB/s to the backplane.

Basic MXI-Express Thunderbolt Systems

The simplest MXI-Express Thunderbolt system consists of a PC that is connected to a PXIe-1083 in the controller slot of a PXI Express chassis, as shown in the following figure.

Figure 3. Example of a Basic MXI-Express Thunderbolt Link Topology

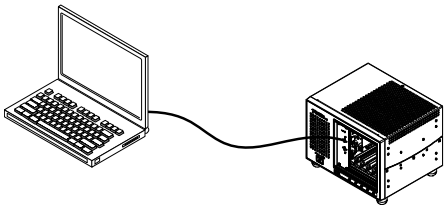

Thunderbolt Bus Extension

You can daisy-chain from a PXIe-1083 that is controlled by a laptop to an additional Thunderbolt 3 compatible device. The following figure shows how you can use a PXIe-1083 to connect multiple Thunderbolt 3 compatible devices to a PC in a daisy-chain topology.

Figure 4. Example of a Daisy-Chain Thunderbolt Link Topology

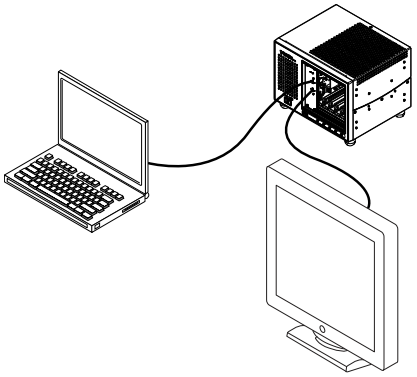

Backwards Compatibility

NI recommends connecting the PXIe-1083 to a Thunderbolt 3 port on the host PC using a Thunderbolt 3 cable. Because Thunderbolt 3 is backwards-compatible with previous Thunderbolt generations, it may be possible to use adapters to establish connections with host PCs or devices with previous-generation Thunderbolt ports. Data throughput

performance may vary between Thunderbolt generations.

Hybrid Peripheral Slots

The chassis provides five (5) hybrid peripheral slots, as defined by the *PXI-5 PXI Express Hardware Specification*: slots 2 through 6. A hybrid peripheral slot can accept the following peripheral modules:

- A PXI Express peripheral with x8, x4, or x1 PCI Express link through a switch to the Thunderbolt 3 controller (and host PC). Each PXI Express peripheral slot can link up to a Gen-2 x1 PCI Express, providing a maximum nominal single-direction bandwidth of 500 MB/s.
- A CompactPCI Express Type-2 peripheral with x8, x4, or x1 PCI Express link to the host PC through a PCI Express switch and Thunderbolt 3 controller.
- A hybrid-compatible PXI peripheral module modified by replacing the J2 connector with an XJ4 connector installed in the upper eight rows of J2. Refer to the *PXI Express Specification* for details. The PXI peripheral communicates through the 32-bit PCI bus of the backplane.
- A CompactPCI 32-bit peripheral on the 32-bit PCI bus of the backplane.

The hybrid peripheral slots provide full PXI Express functionality and 32-bit PXI functionality, except for PXI Local Bus. The hybrid peripheral slot connects to only PXI Local Bus 6 left and right.

Figure 5. PXIe-1083 PCI Express Backplane Diagram

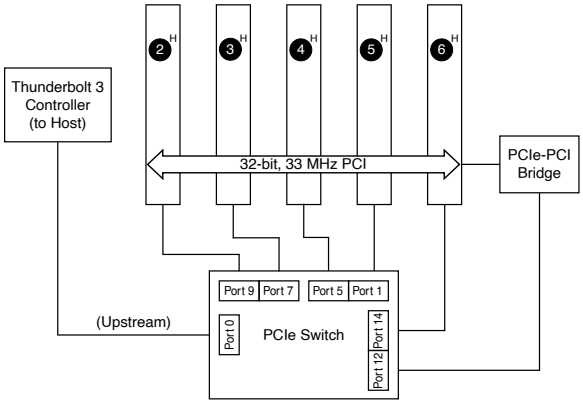

PXI Local Bus

The PXI backplane local bus is a daisy-chained bus that connects each peripheral slot

with adjacent peripheral slots to the left and right.

The backplane routes PXI Local Bus 6 between adjacent PXI slots. The left local bus 6 from slot 2 and right local bus 6 from slot 6 are not routed anywhere.

The backplane routes PXI Local Bus between all slots. Local bus signals may range from high-speed TTL signals to analog signals as high as 42 V.

Initialization software uses the configuration information specific to each adjacent peripheral module to evaluate local bus compatibility.

PXI Trigger Bus

All slots share eight PXI trigger lines. You can use these trigger lines in a variety of ways. For example, you can use triggers to synchronize the operation of several different PXI peripheral modules. Modules can pass triggers to one another on the lines, allowing precisely timed responses to asynchronous external events the system is monitoring or controlling.

The PXI trigger lines from adjacent PXI trigger bus segments can be routed in either direction across the PXI trigger bridges through buffers. This allows you to send trigger signals to, and receive trigger signals from, every slot in the chassis. Static trigger routing (user-specified line and directional assignments) can be configured through Measurement & Automation Explorer (MAX). Dynamic routing of triggers (automatic line assignments) is supported through certain NI drivers, such as NI-DAQmx.

Note Although any trigger line might be routed in either direction, it cannot be routed in more than one direction at a time.

Figure 6. PXI Trigger Bus Connectivity Diagram

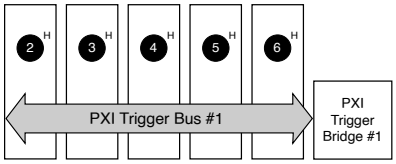

System Reference Clock

The PXIe-1083 chassis supplies PXI_CLK10, PXIe_CLK100, and PXIe_SYNC100 to every peripheral slot with an independent driver for each signal.

An independent buffer drives PXI_CLK10 to each peripheral slot. The buffer is source-impedance matched to the backplane and maintains less than 250 ps of skew between slots. You can use this common reference clock signal to synchronize multiple modules in a measurement or control system.

An independent buffer drives PXIe_CLK100 to each peripheral slot. These clocks are matched in skew to less than 100 ps. The differential pair must use LVPECL termination on the peripheral to allow the buffer to drive PXIe_CLK100. This means that if no peripheral is installed, or if the peripheral does not connect to PXIe_CLK100, no clock is driven to that slot.

An independent buffer drives PXIe_SYNC100 to each peripheral slot. The differential pair must use LVPECL termination on the peripheral to allow the buffer to drive PXIe_SYNC100. This means that if no peripheral is installed, or if the peripheral does not connect to PXIe_SYNC100, there is no SYNC100 signal being driven on the pair to that slot.

PXI_CLK10, PXIe_CLK100, and PXIe_SYNC100 have the default timing relationship described in the following figure.

Figure 7. System Reference Clock Default Behavior

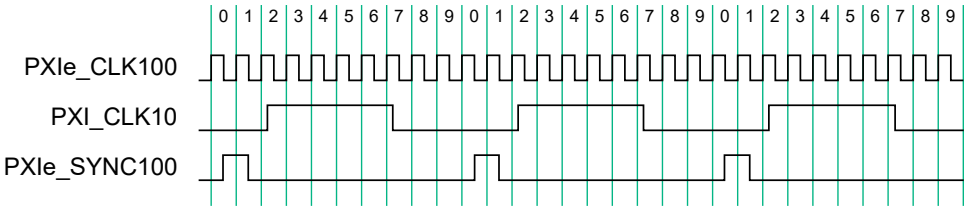

Installation and Configuration

The following section describes how to prepare and operate the PXIe-1083 chassis.

Before connecting the chassis to a power source, read this section and the *Read Me First: Safety and Electromagnetic Compatibility* document included with your kit.

Safety Information

Caution Before undertaking any troubleshooting, maintenance, or exploratory procedure, carefully read the following caution notices.

Caution Protection may be impaired if equipment is not used in the manner specified.

This equipment contains voltage hazardous to human life and safety, and is capable of inflicting personal injury.

- Protective Earth—The facility installation must provide a means for connection to protective earth.
- Chassis Grounding—The chassis requires a connection from the premise wire safety ground to the chassis ground. The earth safety ground must be connected during use of this equipment to minimize shock hazards. Refer to the *Connecting Safety Ground* section for instructions on connecting safety ground.
- Live Circuits—Operating personnel and service personnel must not remove protective covers when operating or servicing the chassis. Adjustments and service to internal components must be undertaken by qualified service technicians. During service of this product, the mains connector to the premise wiring must be disconnected. Dangerous voltages may be present under certain conditions; use extreme caution.
- Explosive Atmosphere—Do *not* operate the chassis in conditions where flammable gases are present. Under such conditions, this equipment is unsafe and may ignite the gases or gas fumes.
- Part Replacement—Only service this equipment with parts that are exact replacements, both electrically and mechanically. Contact NI for replacement part

information. Installation of parts with those that are not direct replacements may cause harm to personnel operating the chassis. Furthermore, damage or fire may occur if replacement parts are unsuitable.
- Modification—Do not modify any part of the chassis from its original condition. Unsuitable modifications may result in safety hazards.

Chassis Cooling Considerations

The PXIe-1083 chassis is designed to operate on a bench or in an instrument rack. You must adhere to the cooling clearances as outlined in the following section.

Related tasks:

- Maintaining Forced-Air Cooling

Providing Adequate Clearance

The module and power supply intake vents are located on the front, left side, and bottom of the chassis. The module and power supply exhaust vents for the PXIe-1083 are located on the top, side, and rear of the chassis.

Adequate clearance between the chassis and surrounding equipment, heat generating devices, and air flow blockages must be maintained to ensure proper cooling. Minimum cooling clearances are shown in the following figure. For rack mount applications, adequate forced air ventilation is required. For benchtop applications, additional cooling clearances may be required for optimal air flow and reduced hot air recirculation to the air inlet fans.

Figure 8. PXIe-1083 Cooling Clearances

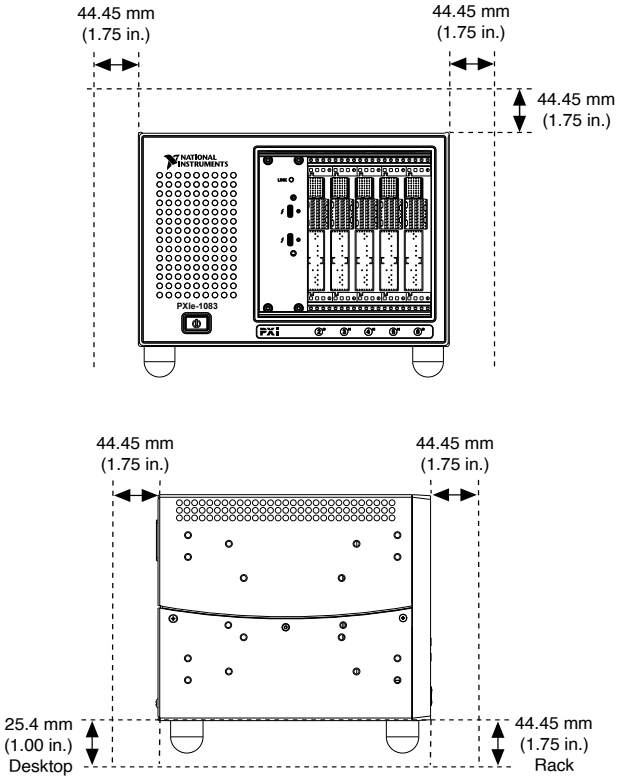

Caution Failure to provide these clearances may result in undesired thermal-related issues with the chassis or modules.

To aid in thermal health monitoring for either rack or benchtop use, you can monitor the chassis intake temperatures in Measurement & Automation Explorer (MAX) to ensure the temperatures do not exceed the ratings in the *Operating Environment* section of the *PXIe-1083 Specifications*.

Additionally, many PXI modules provide temperature values you can monitor to ensure critical temperatures are not exceeded. Increasing chassis clearances, improving ventilation, reducing external ambient temperatures, and removing nearby heat sources are all options for improving overall chassis thermal performance.

Figure 9. PXIe-1083 Vents

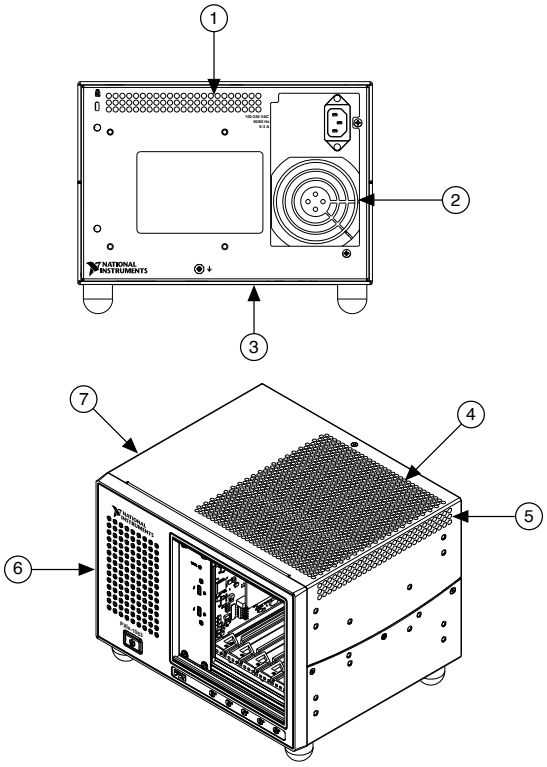

1. Air Exhaust Vent
2. Air Exhaust Vent
3. Air Intake
4. Air Exhaust Vent
5. Air Exhaust Vent
6. Air Intake
7. Air Intake

Note The side exhaust vent (not shown) is located on the left side of the chassis.

Chassis Ambient Temperature Definition

The chassis fan control system uses ambient intake air temperatures for controlling fan speeds when in Auto mode. These temperatures may be higher than ambient room temperature depending on surrounding equipment and/or airflow blockages. Ensure ambient intake temperatures do not exceed the ratings in the *Operating Environment* section of the *PXIe-1083 Specifications*. You can monitor the module ambient intake

temperatures in NI Measurement & Automation Explorer (MAX).

Setting Fan Speed

The PXIe-1083 chassis supports multiple fan operating modes. Refer to the *Fan Mode* section for more information.

Related tasks:

- Maintaining Forced-Air Cooling

Related reference:

- Fan Mode

Rack Mounting

Rack mount applications require optional rack mount kits, which are available from NI. Refer to the instructions supplied with the rack mount kits to install your PXIe-1083 chassis in an instrument rack.



Note You might want to remove the feet from the PXIe-1083 chassis when rack mounting.

Figure 10. PXIe-1083 Rack Mount Kit Components

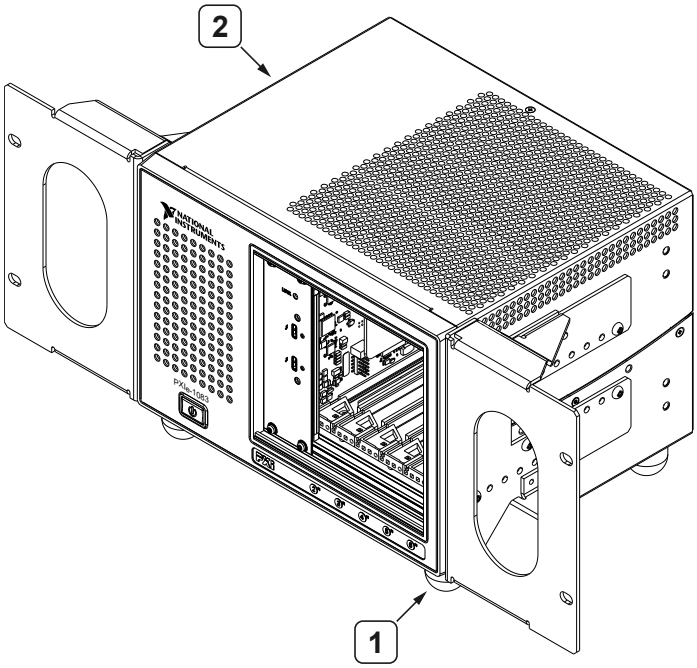

1. Rack Mount Kit (NI Part Number: 778948-01)
2. PXIe-1083 Chassis

Connecting the Safety Ground

Caution The PXIe-1083 chassis are designed with a three-position IEC 60320 C14 inlet for the U.S. that connects the ground line to the chassis ground. For proper grounding, a suitable cordset must be used to connect this inlet to an appropriate earth safety ground.

If your power outlet does not have an appropriate ground connection, you must connect the premise safety ground to the chassis grounding screw located on the rear panel. To connect the safety ground, complete the following steps:

1. Connect a 16 AWG (1.3 mm) wire to the chassis grounding screw (M4 SEMS) using a grounding lug. The wire must have green insulation with a yellow stripe or must be noninsulated (bare).
2. Attach the opposite end of the wire to permanent earth ground using toothed washers or a toothed lug.

Connecting to a Power Source

Caution Do not install modules prior to performing the following power-on test. To completely remove power, you must disconnect the AC power cable.

Attach input power through the rear AC inlet using the appropriate AC power cable supplied.

The Power Inhibit switch allows you to power on the chassis or place it in standby mode. With an empty chassis in Default Mode, press down the Power Inhibit switch and hold it down for one second. Observe that all fans become operational, the status LED is green, and the LINK LED is solid amber (without a host PC). Pressing and holding the Power Inhibit switch again for one second will return the chassis to standby.

Cabling

The following table shows the various MXI-Express Thunderbolt cables available from NI.

Table 2. NI MXI-Express Thunderbolt Cables

Description	Cable Length (Meters)	Part Number
MXI-Express Thunderbolt active cable	2 m	785607-02
MXI-Express Thunderbolt passive cable	2 m	785608-02
MXI-Express Thunderbolt passive cable	0.8 m	787580-0R8

Connect the MXI-Express Thunderbolt cable to the host PC Thunderbolt port and PXIe-1083. The cables have no polarity, so you can connect either end to either Thunderbolt port. The cable plugs are reversible, and there is no defined upstream or downstream port on the PXIe-1083.

Caution Although Thunderbolt is a hotpluggable technology, avoid removing the cable after the system is powered on. Doing so can hang or cause errors in applications communicating with devices behind MXI-Express Thunderbolt. If a cable becomes unplugged, plug it back into the system.

For more information about MXI-Express Thunderbolt cabling, go to ni.com/thunderbolt.

Powering On/Off the MXI-Express Thunderbolt System

This chassis includes a feature to follow host power based on the Thunderbolt connection. The following table defines how to power on or off the chassis based on the connection to the host.

Table 3. Chassis Inhibit Mode: Default

PXIe-1083 Power	Thunderbolt Connection to Host	Actions Required
To power the PXIe-1083 on	Not present	Press the power button.
	Present	Power on the host.
To power the PXIe-1083 off	Not present	Press the power button.
	Present	Power off the host. Press the power button > 4 s to initiate a forced shutdown.

Note Causing a forced shutdown of the chassis may result in crashes or hangs if a DMA transaction is active between the module installed in the PXIe-1083 and the host PC.

Note NI does not support hot-plugging/unplugging the Thunderbolt connection.

Table 4. Chassis Inhibit Mode: Manual

PXIe-1083 Power	Actions Required
To power the PXIe-1083 on	AC on
To power the PXIe-1083 off	AC off

Observe the PXIe-1083 LED status where applicable. A properly connected and powered up system should report a valid link and power status once the host PC is powered on. Refer to *LED Indicators* for more information.

Note Refer to *Inhibit Mode* for more Information about the Default and Manual chassis inhibit modes.

Related reference:

- Inhibit Mode

Installing Peripheral Modules

This section contains general installation instructions for installing a peripheral module in a PXIe-1083 chassis. Refer to your peripheral module user manual for specific instructions and warnings. To install a module, complete the following steps:

1. Connect the AC power source to the PXI Express chassis before installing the module. The AC power cord grounds the chassis and protects it from electrical damage while you install the module.
2. Ensure that the chassis is powered off.
3. Install a module into a chassis slot by first placing the module card PCB into the front of the card guides (top and bottom), as shown in the following figure. Slide the module to the rear of the chassis, making sure that the injector/ejector handle is pushed down, as shown in the following figure.
4. When you begin to feel resistance, push up on the injector/ejector handle to fully seat the module into the chassis frame. Secure the module front panel to the chassis using the module front-panel mounting screws.

Figure 11. Installing PXI, PXI Express, or CompactPCI Peripheral Modules

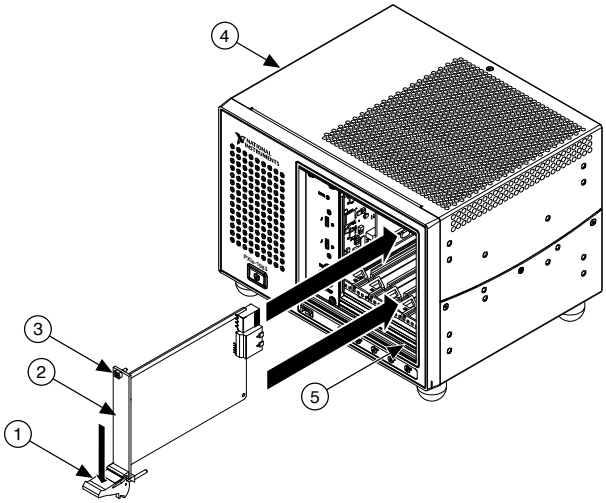

1. Injector/Ejector Handle
2. PXI Peripheral Module
3. Peripheral Module Front Panel Mounting Screws (2x)
4. PXI Express Chassis
5. Injector/Ejector Rail

LINK LED

The tri-color LINK LED on the PXIe-1083 front panel gives status information about the power supply and link state, as the following table describes.

Table 5. LINK LED Colors

LED	Color	Meaning
LINK	Off	Power is off.
	Blinking red	Power is out of spec.
	Solid amber	Power is within spec; no link to chassis.
	Solid green	Power is within spec; link established.

Status LED

The following figure shows the front panel Status LED. The following table describes the Status LED states.

Figure 12. Status LED



Table 6. Front Panel Status LED States

LED	State	Description
Status LED	Off	The chassis is powered off.
	Steady green	The chassis is powered on and operating normally.
	Steady red	Indicates that the temperature is out of range or that an internal chassis fault has occurred.

Related tasks:

- Maintaining Forced-Air Cooling

DIP Switches

Use the DIP switches on the daughterboard to control chassis behavior. Refer to the following figure for the DIP switches location.

Figure 13. PXIe-1083 DIP Switch Location

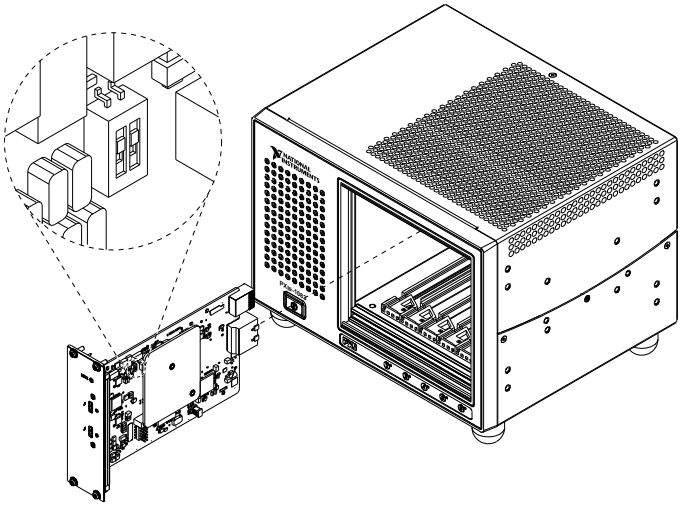

DIP switch #1 (on the left) controls the chassis fan mode. Set this switch in the off

(down) position to select Auto mode. Set this switch in the on (up) position to select High mode.

DIP switch #2 (on the right) controls the chassis Inhibit Mode. Set this switch in the off (down) position to select Default mode. Set this switch in the on (up) position to select Manual mode.

Figure 14. Backplane DIP Switches

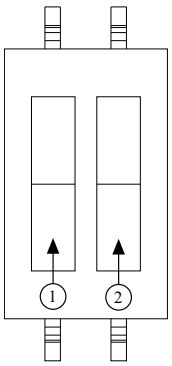

1. Switch #1 (Fan)
2. Switch #2 (PWR)

Table 7. DIP Switch States

Location	Switch	State	Description
1	FAN	Off (Down)	Set the chassis fan mode to Auto. Refer to the *Fan Mode* section for information.
		On (Up)	Set the chassis fan mode to High.
2	PWR	Off (Down)	Set the chassis inhibit mode to Default. Refer to the *Inhibit Mode* section for information.
		On (Up)	Set the chassis inhibit mode to Manual.

Inhibit Mode

Inhibit modes control chassis power behavior when a host is connected through the Thunderbolt port or when AC power changes.

The PXIe-1083 chassis supports operation in the following inhibit modes:

- **Default**—

  In Default mode, when no host is connected to the chassis Thunderbolt port, press the Power Inhibit button to power on the chassis.

  Use Default mode for normal power inhibit button functionality.

  When the host is connected to the chassis via a Thunderbolt cable, the chassis follows the host power states.

- **Manual**—In Manual mode, the chassis powers up when you apply AC power. The chassis shuts down when you remove AC power.

Related reference:

- Powering On/Off the MXI-Express Thunderbolt System

Inhibit Mode Selection

You can select the PXIe-1083 chassis Inhibit Mode using a DIP switch on the daughterboard. Refer to the *DIP Switches* section for the DIP switch location and more information about DIP switch settings.

Fan Mode

Fan mode settings control chassis fan speed based on intake air temperature or a fixed high speed. Use Auto mode for improved acoustic performance or High mode for maximum cooling.

The PXIe-1083 chassis operates in the following fan modes:

- **Auto**—

In Auto mode, the chassis intake air temperature determines the chassis fans speed.

Select Auto mode for improved acoustic performance.

- **High**—

  In High mode, the chassis fans speed is fixed at high speed regardless of the chassis intake air temperature.

  Select High mode for maximum cooling performance.

Related tasks:

- Maintaining Forced-Air Cooling

Related reference:

- Setting Fan Speed

Cooling Profiles

Both fan modes are available within the 38 W and 58 W cooling profiles.

- 38 W cooling profile supports NI modules up to 38 W max power dissipation
- 58 W cooling profile supports NI modules up to 58 W max power dissipation

Note Refer to Operating Environment requirements in the *PXIe-1083 Specifications* for more information about chassis ambient temperature range and cooling capacity.

Fan Mode Selection

The chassis fan mode can be selected using Measurement & Automation Explorer (MAX). Refer to the *Fan Configuration in MAX* section for more information.

Alternatively, the fan mode on the PXIe-1083 chassis is selected using a DIP switch on

the daughterboard. Refer to the *DIP Switches* section for more information about the DIP switch.



Note The DIP switch must be in the Auto position for software configuration in MAX to work. If the DIP switch is in the High position, the chassis fan mode will be High regardless of the software setting.

PXI Express System Configuration with MAX

The PXI Platform Services software included with your chassis automatically identifies your PXI Express system components to generate a `pxiesys.ini` file. You can configure your entire PXI system and identify PXI-1 chassis through Measurement & Automation Explorer (MAX), which is included with your system controller. PXI Platform Services creates the `pxiesys.ini` and `pxisys.ini` files, which define your PXI system parameters.



Note The configuration steps for single or multiple-chassis systems are the same.

MAX provides the following chassis information:

- Asset information, such as serial number or part number
- Chassis number
- Voltages, temperatures, and fan speed
- Fan and cooling settings
- Slot details
- Chassis self-test
- Firmware update

Figure 15. Chassis Settings in MAX

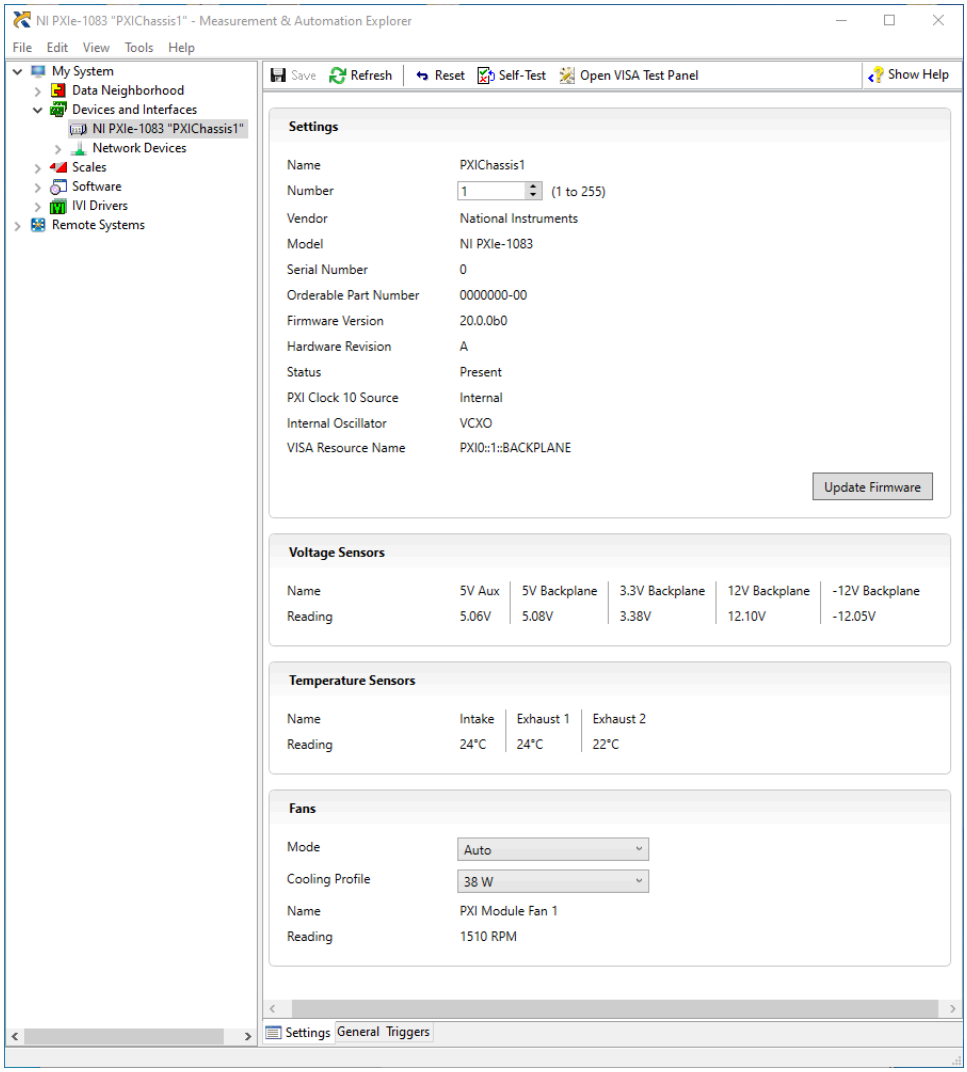

Note Information available through MAX might vary based on your chassis variant or firmware and platform services version.

Trigger Configuration in MAX

PXI Platform Services provides an interface for routing and reserving triggers, allowing drivers such as DAQmx to dynamically route signals without double-driving or damaging trigger lines. For more information about routing and reserving PXI triggers, refer to KnowledgeBase 3TJDOND8 at ni.com/support.

Each chassis has one or more trigger buses, each with eight lines numbered 0 through 7, that can be reserved and routed statically or dynamically. Static reservation *pre-*

allocates a trigger line to prevent its configuration by a user program. Dynamic reservation/routing/deallocation is *on the fly* within a user program that is based on NI APIs such as NI-DAQmx. NI recommends that dynamic reservations and routing are used whenever possible. If static reservations are required, static reservation of trigger lines can be implemented by the user in MAX through the Triggers tab. PXI modules dynamically configured by programs such as NI-DAQmx do not use reserved trigger lines. This prevents the instruments from double-driving the trigger lines, possibly damaging devices in the chassis. In the default configuration, trigger lines on each bus are independent. For example, if trigger line 3 is asserted on trigger bus 0, by default it is not asserted automatically on any other trigger bus.

Complete the following steps to reserve these trigger lines in MAX.

1. In the Configuration tree, click the PXI chassis branch to configure.
2. In the lower right pane, click the Triggers tab.
3. Select the trigger lines to statically reserve.
4. Click the Save button.

Figure 16. Trigger Configuration in MAX

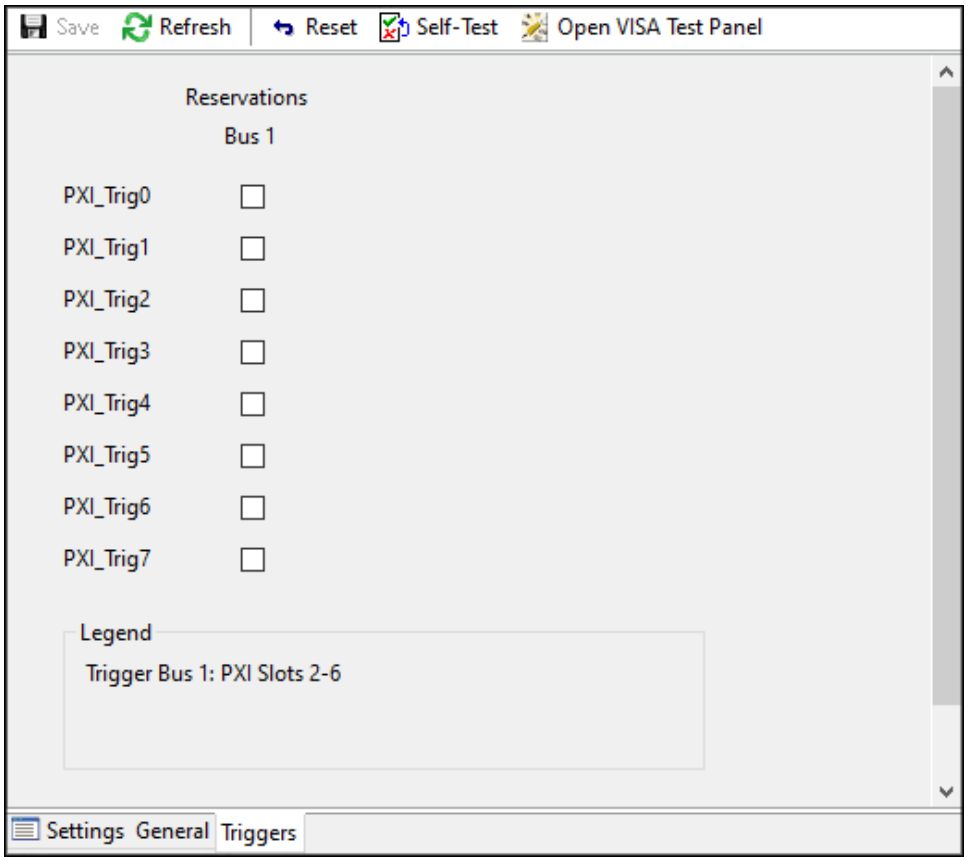

Fan Configuration in MAX

You can configure fan behavior using software settings in MAX.

The PXIe-1083 supports both Auto and High fan modes for both the 38 W and 58 W cooling profiles. Refer to the *Fan Mode* section for more information about these modes.

You can also select a Manual fan mode. In this mode, you can manually set the fan speeds to achieve the desired performance.

Note You must not set the fan speeds or power settings lower than the minimum level required to maintain cooling levels.

Complete the following steps to change the fan settings in MAX .

1. In the **Configuration** tree, click on the PXI chassis you want to configure.
2. In the right-hand pane, click on the **Settings** tab.
3. In the **Fans** group, select the desired **Mode and Cooling Profile** using the drop-down menus.
4. Click **Save**.
   The fan speed changes.

Using System Configuration and Initialization Files

The capability documentation for the PXIe-1083 chassis is provided in the `chassis.ini` file on the software media included with the chassis. This information is combined with information about the system controller to create a single system initialization file called `pxisys.ini` (PXI System Initialization). NI system controllers provide the `pxisys.ini` file for the PXIe-1083 chassis, so you typically do not need to use the `chassis.ini` file. For more information about `pxisys.ini` and `chassis.ini` files, refer to the documentation provided with the system controller or visit *ni.com/support*.

Device drivers and other utility software read the `pxisys.ini` file to obtain system information. In most cases, device drivers do not need to read the `chassis.ini` file

directly. For detailed information about initialization files, refer to the PXI Express specification at *www.pxisa.org*.

Maintenance

This section describes basic maintenance procedures you can perform on the PXIe-1083 chassis.

Caution Disconnect the power cable prior to servicing your PXIe-1083 chassis.

Service Interval

Clean dust from the chassis exterior (and interior) as needed, based on the operating environment. Periodic cleaning increases reliability.

Preparation

The information in this section is designed for use by qualified service personnel. Read the *Read Me First: Safety and Electromagnetic Compatibility* document included with your kit before attempting any procedures in this section.

Note Many components within the chassis are susceptible to static discharge damage. Service the chassis only in a static-free environment. Observe standard handling precautions for static-sensitive devices while servicing the chassis. *Always* wear a grounded wrist strap or equivalent while servicing the chassis.

Maintaining Forced-Air Cooling

Inadequate air circulation can cause the temperature within a PXI chassis to rise above the maximum recommended operating temperature for your PXI/PXI Express module. Overheating can cause a thermal shutdown or damage to the PXI/PXI Express module.

Ensure the ambient temperature of your PXI system is within the specifications for all of the system components. Ensure the ambient temperature provides adequate

cooling clearances for your chassis to achieve the required airflow through the chassis.



Note The ambient temperature of a PXI system is defined as the temperature at the chassis fan inlet (air intake).

Follow these guidelines to maintain optimal forced-air cooling for PXI and PXI Express modules in the chassis:

- NI highly recommends installing slot blockers in unused slots to maximize airflow in the slots populated with instrumentation.
- Install filler panels over slot blockers and unused slots.
  Missing filler panels disrupt the necessary air circulation in the chassis.
- Install your chassis so cooling clearances meet the specifications stated in the specifications.
  Allow space around the chassis fan intake and exhaust vents; if you remove the chassis feet, allow for adequate clearance below the chassis. Blocked fan vents impede the airflow needed for cooling.
- For rackmount PXI deployments, follow these guidelines:
  - Place high-power units within the rack above the PXI system where possible.
  - Use racks with open sides and/or rear panels.
  - Use fan trays within the rack, and at the top and bottom of the rack, to increase overall airflow and reduce ambient temperatures within the rack.
  - Use other methods that reduce ambient temperature within the rack.
- If your chassis includes fan filters, clean them at least every six months.
  Depending on the amount of chassis use and the ambient dust levels, filters may require more frequent cleaning. If regular maintenance of dirty or clogged filters is not possible, you can remove foam filters to maintain adequate cooling.
- Set all chassis fans to high unless directed otherwise by the PXI or PXI Express module documentation; do not disable the fan(s).
- Ensure the ambient temperature does not exceed the rated ambient temperature specification.
  Refer to the chassis temperature LED, if available, or use a temperature probe to verify temperature.

Related tasks:

- Installing PXI Slot Blockers

- Installing PXI Filler Panels

Related reference:

- Chassis Cooling Considerations
- Setting Fan Speed
- Fan Mode
- Status LED

Installing PXI Slot Blockers

PXI slot blockers improve system cooling in PXI chassis by rerouting airflow from empty slots to slots containing PXI modules.

NI recommends using PXI slot blockers with standard or EMC filler panels to improve cooling performance for all PXI chassis.

> **Notice** NI highly recommends installing PXI slot blockers if your PXI chassis features rear fans.

You can order PXI slot blockers (NI part number 199198-01) on `ni.com`.

To install PXI slot blockers in your PXI chassis, complete the following steps.

1. Install a PXI slot blocker in each empty slot of your PXI chassis.

Figure 17. Slot Blocker Installation

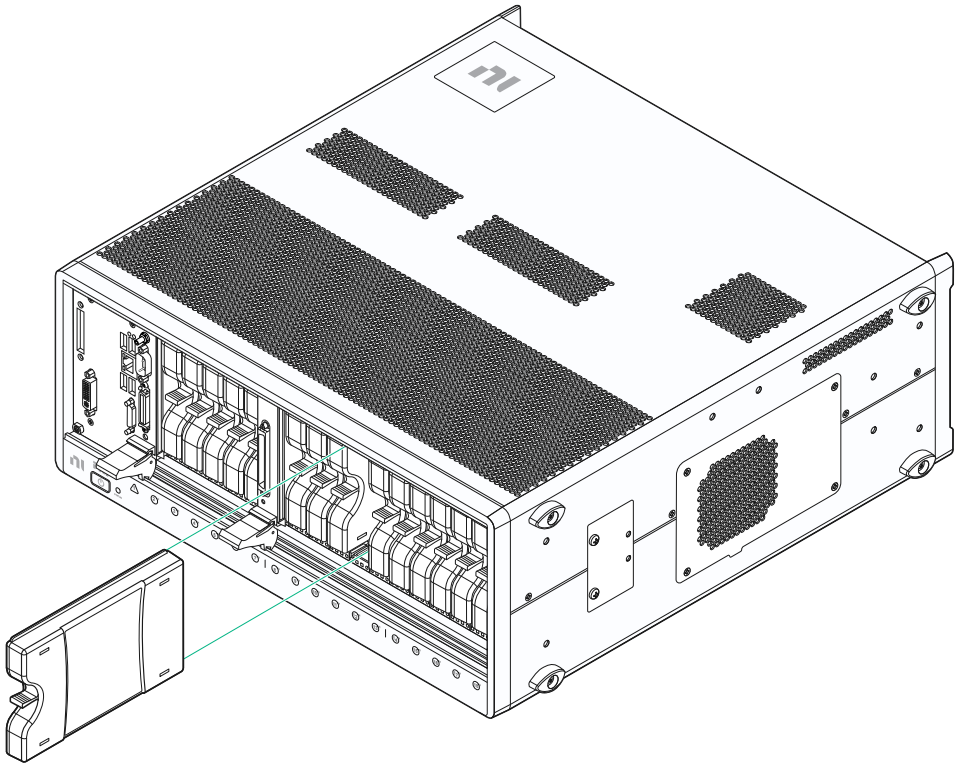

2. Install PXI filler panels over each slot containing a PXI slot blocker.

Related tasks:

- Installing PXI Filler Panels

Installing PXI Filler Panels

To ensure proper cooling, install standard filler panels or EMC filler panels over each empty slot of a PXI chassis.

Filler panels improve the cooling performance of the system. EMC filler panels contain additional gaskets to control EMC emissions from the chassis. Some PXI/PXI Express modules require EMC filler panels to meet specification conditions.

Note To ensure adequate cooling of modules, you must install filler panels over all chassis slots. To ensure optimal cooling performance, NI recommends using slot blockers with filler panels.

For more information about PXI filler panels, visit `ni.com/r/emcpanels`.

1. Remove the captive screw covers, if present, from the filler panel.
2. Secure the captive mounting screws to the chassis.

> **Note** Do not overtighten the screws (2.5 in. · lb maximum).

When installing EMC filler panels, ensure that the EMC gasket is on the right side as shown in the following figure.

Figure 18. EMC Filler Panel Installation

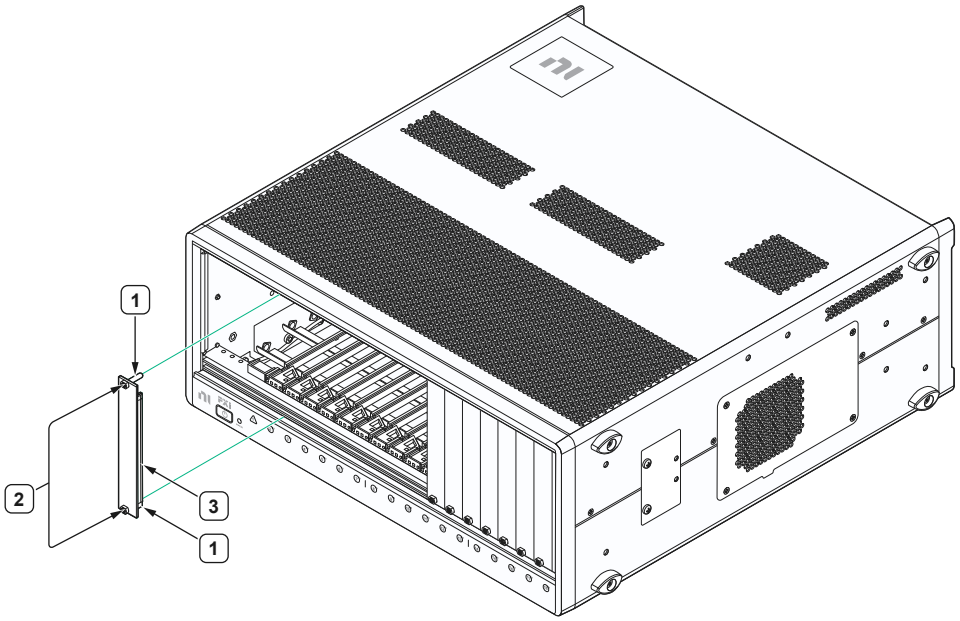

1. Captive screw covers
2. Captive mounting screws
3. EMC gasket

When installing standard filler panels, install as shown in the following figure.

Figure 19. Standard Filler Panel Installation

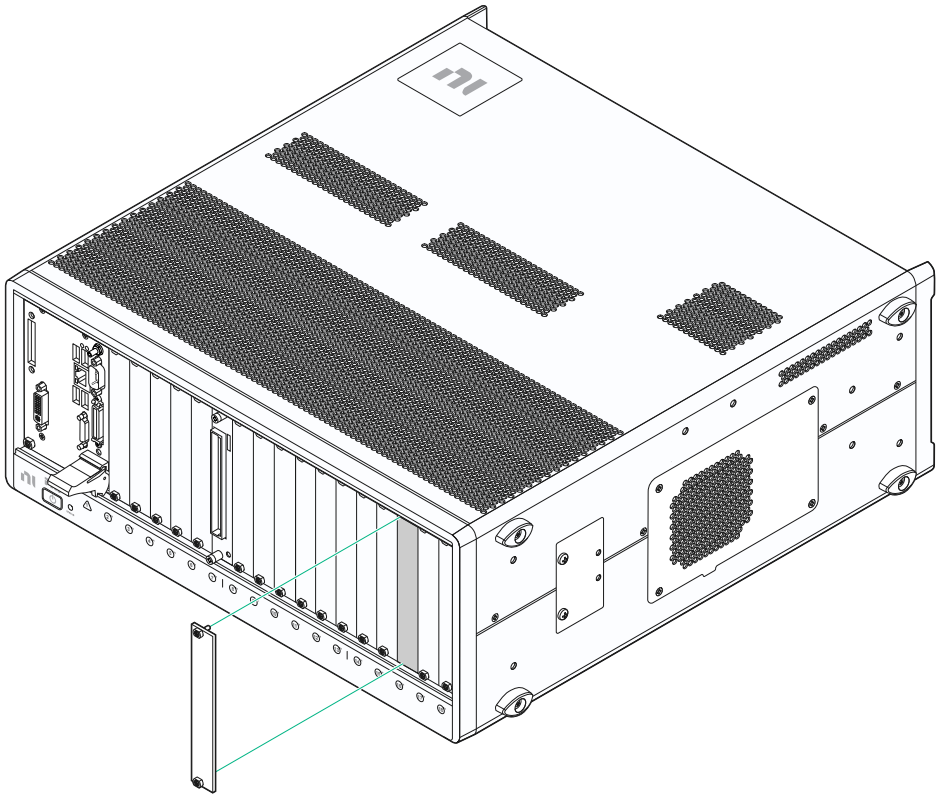

Related tasks:

- Installing PXI Slot Blockers

Related information:

- Standard or EMC Filler Panels for My PXI Chassis

Cleaning

Cleaning procedures consist of exterior and interior cleaning of the chassis and cleaning the fan filters. Refer to your module's user documentation for information about cleaning individual CompactPCI or PXI Express modules.

Caution Always disconnect the power cable prior to servicing the chassis.

Interior Cleaning

Use a dry, low-velocity stream of air to clean the interior of the chassis. Use a soft-bristle brush for cleaning around components.

Exterior Cleaning

Clean the exterior surfaces of the chassis with a dry, lint-free cloth or a soft-bristle brush. If any dirt remains, wipe with a cloth moistened in a mild soap solution. Remove any soap residue by wiping with a cloth moistened with clear water. Do not use abrasive compounds on any part of the chassis.

Caution Avoid getting moisture inside the chassis during exterior cleaning, especially through the top vents. Use just enough moisture to dampen the cloth.

Do not wash the front- or rear-panel connectors or switches. Cover these components while cleaning the chassis.

Do not use harsh chemical cleaning agents; they may damage the chassis. Avoid chemicals that contain benzene, toluene, xylene, acetone, or similar solvents.

Related Documentation

The following documents contain information that you might find helpful as you read this manual:

- IEEE 1101.1-1991, *IEEE Standard for Mechanical Core Specifications for Microcomputers Using IEC 603-2 Connectors*
- IEEE 1101.10, I*EEE Standard for Additional Mechanical Specifications for Microcomputers Using IEEE 1101.1 Equipment Practice*
- *PICMG EXP.0 R1.0 CompactPCI Express Specification*, PCI Industrial Computers Manufacturers Group
- *PCI Express Base Specification*, Revision 2.0, PCI Special Interest Group
- *PXI-5 PXI Express Hardware Specification*, Revision 2.0, PXI Systems Alliance

© 2026 National Instruments Corporation.