PXIe-1092 User Manual

2026-11-11

Contents

PXIe-1092 User Manual 4
PXIe-1092 Overview 5
High Performance for Instrumentation Requirements 5
High Reliability 5
Multi-Chassis Support 6
Optional: Timing and Synchronization Upgrade 6
Additional Optional Features 6
Chassis Components 7
PXIe-1092 Backplane Overview 9
Interoperability with CompactPCI 9
System Controller Slot 9
Hybrid Peripheral Slots 10
System Timing Slot 11
Peripheral Expansion Slot 12
Peripheral Expansion Slot Pinouts 13
PXI Local Bus 14
PXI Trigger Bus 14
System Reference Clock 15
OCXO 17
10 MHz Input Reference 18
10 MHz Output Reference 19
Installation and Configuration 21
Unpacking 21
What You Need to Get Started 21
Optional Equipment 22
Safety Information 23
Chassis Cooling Considerations 24
Providing Adequate Clearance 24
Chassis Ambient Temperature Definition 26
Setting Fan Speed 27
Installing Filler Panels 27
Installing Slot Blockers 27

Rack Mounting 27
Connecting the Safety Ground 28
Connecting to a Power Source 29
Installing a System Controller 29
Installing Peripheral Modules 30
Installing Peripheral Modules in the Peripheral Expansion Slot 32
LED Indicators 33
DIP Switches 35
Inhibit Mode 36
Inhibit Mode Selection 37
Fan Mode 37
Cooling Profiles 37
Fan Mode Selection 38
PXI_CLK10 Rear Panel Connectors 38
High-Density Triggers 38
Remote Inhibit and Chassis Monitoring 40
USB Port 43
PXI Express System Configuration with MAX 44
Trigger Configuration in MAX 45
PXI Trigger Bus Routing 46
Inhibit Mode Configuration in MAX 46
Fan Configuration in MAX 47
Using System Configuration and Initialization Files 47
Maintenance 49
Calibration 61
Related Documentation 62

PXIe-1092 User Manual

The PXIe-1092 User Manual provides detailed descriptions of the product functionality and the step by step processes for use.

Looking for Something Else?

For information not found in the User Manual for your product, such as specifications and API reference, browse *Related Information*.

Related information:

- PXIe-1092 Specifications
- Software and Driver Downloads
- Dimensional Drawings
- Product Certifications
- Letter of Volatility
- Discussion Forums
- NI Learning Center

PXIe-1092 Overview

The PXIe-1092 chassis combines a high-performance 9-slot PXI Express backplane with a high-output power supply and a structural design that has been optimized for maximum usability in a wide range of applications. The chassis' modular design ensures a high level of maintainability, resulting in a very low mean time to repair (MTTR). The PXIe-1092 chassis fully complies with the *PXI-5 PXI Express Hardware Specification*, offering advanced timing and synchronization features.

An optional timing and synchronization upgrade provides inter-chassis trigger routing capability, higher accuracy CLK10 and CLK100, connectors for 10 MHz reference clock input and output, and remote chassis monitoring and inhibit control.

The key features of the PXIe-1092 chassis include the following:

High Performance for Instrumentation Requirements

- Up to 8 GB/s (single direction) per PXI Express slot dedicated bandwidth (x8 Gen-3 PCI Express).
- 58 W per slot cooling from 0 °C to 55 °C, and 82 W per slot cooling from 0 °C to 40 °C, meets increased PXI Express cooling requirements
- Low-jitter internal 10 MHz reference clock for PXI/PXI Express slots with ± 25 ppm stability
- Low-jitter internal 100 MHz reference clock for PXI Express slots with ± 25 ppm stability
- Quiet operation for 0 to 30 °C at 35.9 dBA
- Variable speed fan controller optimizes cooling and acoustic emissions
- Complies with PXI and CompactPCI Specifications

High Reliability

- 0 to 55 °C extended temperature range
- Power supply, temperature, and fan monitoring
- Field replaceable fans
- Field replaceable power supply

Multi-Chassis Support

- PXI Express System Timing Slot for tight synchronization across multiple chassis
- Switchless CLK10 routing

Optional: Timing and Synchronization Upgrade

- Internal 10 MHz OCXO reference that boosts frequency accuracy of CLK10 and CLK100 to ±80 ppb
- Rear panel CLK10 I/O connectors
- High-density trigger ports for sharing multiple triggers between chassis
- Remote power inhibit control and chassis monitoring
- USB 3.0 port

Additional Optional Features

- Front and rear rack-mount kits
- Replacement power supply
- EMC filler panels
- Slot blockers for improved cooling performance
- Factory installation services
- Replacement fan kit

Chassis Components

The following figures show key features of the PXIe-1092 chassis front and back panels.

Figure 1. Front View of the PXIe-1092

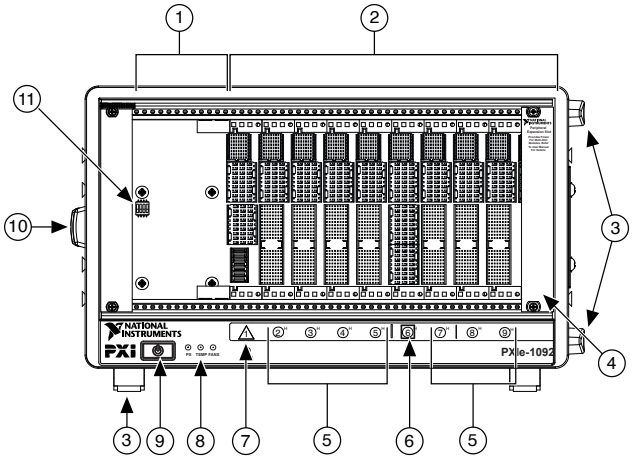

1. System Controller Expansion Slot
2. Backplane Connectors
3. Removeable Feet
4. Peripheral Expansion Slot
5. PXI Express Hybrid Peripheral Slots (7x)
6. PXI Express System Timing Slot
7. PXI Express System Controller Slot
8. Front Panel LEDs
9. Power Inhibit Switch
10. Chassis Carry Handle
11. DIP Switch

Figure 2. Rear View of the PXIe-1092

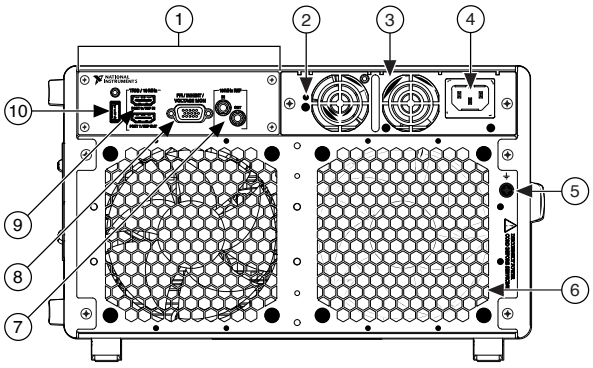

1. Timing and Synchronization Upgrade
2. Rear Panel Power Supply LED
3. Power Supply
4. Universal AC Input
5. Chassis Protective Earth Terminal
6. Fan Module
7. 10 MHz REF IN and OUT SMA Connectors
8. Remote Inhibit and Chassis Monitoring Port
9. High-Density Trigger Ports
10. USB 3.0 Port

Interoperability with CompactPCI

The design of the PXIe-1092 provides you the flexibility to use the following devices in a single PXI Express chassis:

- PXI Express compatible products
- CompactPCI Express compatible 2-Link system controller products
- CompactPCI Express compatible Type-2 peripheral products
- PXI peripheral products modified to fit in a hybrid slot
- Standard CompactPCI peripheral products modified to fit in a hybrid slot

System Controller Slot

The system controller slot is slot 1 of the chassis and is a 2-Link configuration system slot as defined by the CompactPCI Express and PXI Express specifications. The chassis includes three system controller expansion slots for system controller modules that are wider than one slot. These slots allow the system controller to expand to the left to prevent the system controller from using peripheral slots.

The backplane connects the system slot to a PCI Express switch using a Gen-3 x8 and a Gen-3 x16 PCI Express link. The PCIe switch is divided into 2 logical PCIe switches to distribute PCIe connections to the peripheral slots and to 2 PCIe-to-PCI bridges to provide PCI busses to the hybrid peripheral slots.

System slot link 1 is a Gen-3 x8 PCI Express link to the primary PCI Express switch, providing a nominal bandwidth of 8 GB/s (single direction) between the system controller and logical PCI Express switch 1. PXI Express peripheral slots 2-4 are connected to logical PCI Express switch 1 with Gen-3 x8 PCI Express links and are downstream of system slot link 1.

System slot link 2 is a Gen-3 x16 PCI Express link to the primary PCI Express switch, providing a nominal bandwidth of 16 GB/s (single direction) between the system controller slot and logical PCI Express switch 2. PXI Express peripheral slots 5-9 are connected to logical PCI Express switch 2 with Gen-3 x8 PCI Express links and are downstream of system slot link 2.

The PCI Express-to-PCI bridges are connected to PCI Express switch 2 and provide a 32-bit, 33 MHz PCI bus for hybrid peripheral slots 2, 3, 4, 5, 7, 8, and 9.

The system controller slot also has connectivity to some PXI features such as: `PXI_CLK10`, `PXI Star`, `PXI Trigger Bus`, and `PXI Local Bus 6`. By default, the system controller controls the power supply with the `PS_ON#` signals. A logic low on this line powers on the power supply.

Note The chassis Inhibit Mode must be set to Default mode for the system controller to control the power supply. Refer to the *Inhibit Mode* section for details about configuring Inhibit Mode.

Hybrid Peripheral Slots

The chassis provides seven (7) hybrid peripheral slots as defined by the *PXI-5 PXI Express Hardware Specification*: slots 2, 3, 4, 5, 7, 8, and 9. A hybrid peripheral slot can accept the following peripheral modules:

- A PXI Express peripheral with x8, x4, or x1 PCI Express link through a switch to the system slot. Each PXI Express peripheral slot can link up to a Gen-3 x8 PCI Express, providing a maximum nominal single-direction bandwidth of 8 GB/s.
- A CompactPCI Express Type-2 Peripheral with x8, x4, or x1 PCI Express link through a PCI Express switch to the system slot.
- A hybrid-compatible PXI Peripheral module modified by replacing the J2 connector with an XJ4 connector installed in the upper eight rows of J2. Refer to the *PXI Express Specification* for details. The PXI peripheral communicates through the backplane's 32-bit PCI bus.
- A CompactPCI 32-bit peripheral on the backplane's 32-bit PCI bus.

The hybrid peripheral slots provide full PXI Express functionality and 32-bit PXI functionality except for PXI Local Bus. The hybrid peripheral slot only connects to PXI Local Bus 6 left and right.

Figure 3. PXIe-1092 PCI Express Backplane Diagram

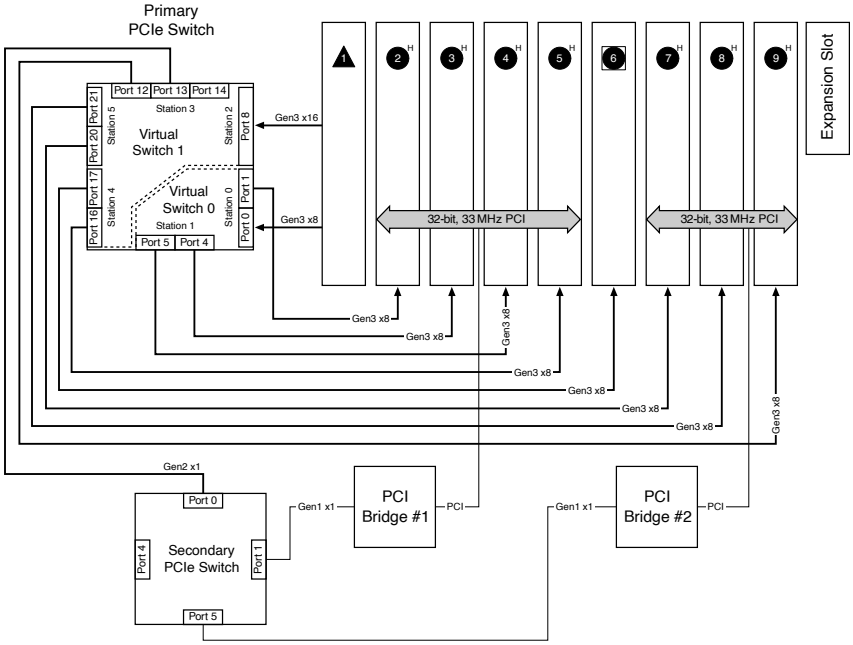

System Timing Slot

The system timing slot is slot 6. The system timing slot accepts the following peripheral modules:

- A PXI Express System Timing Module with x8, x4, or x1 PCI Express link to the system slot through a PCI Express switch. Each PXI Express peripheral or hybrid peripheral slot can link up to a Gen-3 x8 PCI Express, providing a maximum nominal single-direction bandwidth of 8 GB/s.
- A PXI Express Peripheral with x8, x4, or x1 PCI Express link to the system slot through a PCI Express switch.
- A CompactPCI Express Type-2 Peripheral with x8, x4, or x1 PCI Express link to the system slot through a PCI Express switch.

The system timing slot has three (3) dedicated differential pairs (PXIe_DSTAR) connected from the TP1 and TP2 connectors to the XP3 connector for each PXI Express hybrid peripheral slot, as well as routed back to the XP3 connector of the system timing slot, as shown in the following figure. You can use the PXIe_DSTAR pairs for high-speed triggering, synchronization, and clocking. Refer to the *PXI Express Specification* for details.

The system timing slot also has a single-ended (PXI Star) trigger connected to every

slot. Refer to the following figure for more details.

The system timing slot has a pin (PXI_CLK10_IN) through which a system timing module may source a 10 MHz clock to which the backplane phase-locks.

Figure 4. PXIe_DSTAR and PXI Star Connectivity Diagram

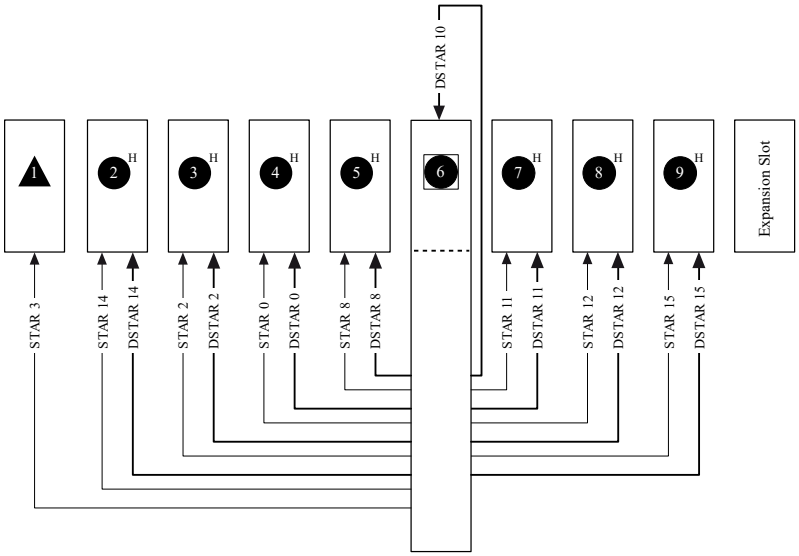

Peripheral Expansion Slot

A peripheral expansion slot is located in slot 10 and can be identified by its black connectors and card guides. The peripheral expansion slot allows for a multiple-slot wide module (that expands to the right) to expand into the peripheral expansion slot to avoid covering peripheral slots.

The peripheral expansion slot provides power and connectors for alignment, but does not provide I/O. For more information about peripheral expansion slot connector pinouts, refer to the *Peripheral Expansion Slot Pinouts* section. The peripheral expansion slot will accept the following peripheral modules:

- Multiple-slot PXI Express peripheral modules that expand to the right. The module's main connectors for signaling are mated in a peripheral slot to the left and a secondary connector for power and/or mechanical alignment may be mated.

Note The peripheral expansion slot does not provide PCI/PXI Express or

timing signals. A single-slot module installed in the peripheral expansion slot will not be functional.

Note The peripheral expansion slot in a Revision B or newer chassis provides (in addition to power and connectors for alignment) PXI_CLK10, PXIe_CLK100, and PXIe_SYNC100 signals. Refer to the *Peripheral Expansion Slot Pinouts* section for details.

Note For connector pinouts for the chassis backplane, refer to the *PXI-5 PXI Express Hardware Specification*, Revision 2.0.

Peripheral Expansion Slot Pinouts

Table 1. Peripheral Expansion Slot XP3 Connector Pinout

Pin	A	B	ab	C	D	cd	E	F	ef
1	PXIe_ CLK100+[1]	PXIe_ CLK100-[1]	GND	PXIe_ SYNC100+[1]	PXIe_ SYNC100-[1]	GND	NC	NC	GND
2	–	–	–	–	–	–	–	–	–
3	–	–	–	–	–	–	–	–	–
4	–	–	–	–	–	–	–	–	–
5	–	–	–	–	–	–	–	–	–
6	–	–	–	–	–	–	–	–	–
7	–	–	–	–	–	–	–	–	–
8	–	–	–	–	–	–	–	–	–
9	–	–	–	–	–	–	–	–	–
10	NC	NC	GND	NC	NC	GND	NC	NC	GND

Table 2. Peripheral Expansion Slot XP4 Connector Pinout

Pin	Z	A	B	C	D	E	F
1	GND	GA4	GA3	GA2	GA1	GA0	GND
2	GND	5Vaux	GND	NC	NC	NC	GND
3	GND	12 V	12 V	GND	GND	GND	GND
4	GND	GND	GND	3.3 V	3.3 V	3.3 V	GND
5	GND	NC	NC	NC	GND	NC	GND

1. For revision B or newer chassis only. For revision A chassis, these signals are no connects (NC).

Pin	Z	A	B	C	D	E	F
6	GND	NC	GND	NC	NC	PXI_CLK10[2]	GND
7	GND	NC	NC	NC	GND	NC	GND
8	GND	NC	GND	NC	NC	NC	GND

PXI Local Bus

The PXI backplane local bus is a daisy-chained bus that connects each peripheral slot with adjacent peripheral slots to the left and right.

The backplane routes PXI Local Bus 6 between all slots. The left local bus 6 from slot 1 is not routed anywhere, and the right local bus 6 from slot 9 is not routed anywhere.

Local bus signals may range from high-speed TTL signals to analog signals as high as 42 V.

Initialization software uses the configuration information specific to each adjacent peripheral module to evaluate local bus compatibility.

PXI Trigger Bus

All slots on the same PXI bus segment share eight PXI trigger lines. You can use these trigger lines in a variety of ways. For example, you can use triggers to synchronize the operation of several different PXI peripheral modules. In other applications, one module located in the system timing slot can control carefully timed sequences of operations performed on other modules in the system. Modules can pass triggers to one another on the lines, allowing precisely timed responses to asynchronous external events the system is monitoring or controlling.

The PXI trigger lines from adjacent PXI trigger bus segments can be routed in either direction across the PXI trigger bridges through buffers. This allows you to send trigger signals to, and receive trigger signals from, every slot in the chassis. Static trigger routing (user-specified line and directional assignments) can be configured through Measurement & Automation Explorer (MAX). Dynamic routing of triggers (automatic

2. For revision B or newer chassis only. For revision A chassis, this signal is a no connect (NC).

line assignments) is supported through certain NI drivers like NI-DAQmx.

Note Although any trigger line may be routed in either direction, it cannot be routed in more than one direction at a time.

With the Timing and Synchronization upgrade, PXI trigger lines can also be routed to I/O ports on the rear of the chassis. This allows you to send trigger signals to, and receive trigger signals from, devices in other chassis. NI drivers such as NI-DAQmx must be used to route triggers between chassis dynamically; routing triggers between chassis using static routes defined in MAX is not supported.

Figure 5. PXI Trigger Bus Connectivity Diagram

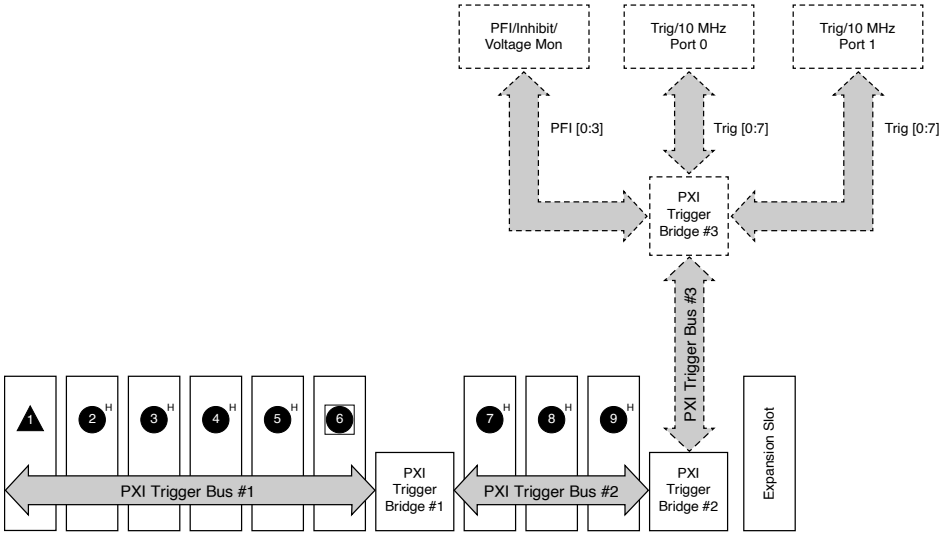

Note Dotted line connections are available only with the Timing and Synchronization upgrade.

System Reference Clock

The PXIe-1092 chassis supplies PXI_CLK10, PXIe_CLK100 and PXIe_SYNC100 to every peripheral slot with an independent driver for each signal. The following figure shows the chassis reference clock architecture.

Figure 6. Chassis Reference Clock Architecture

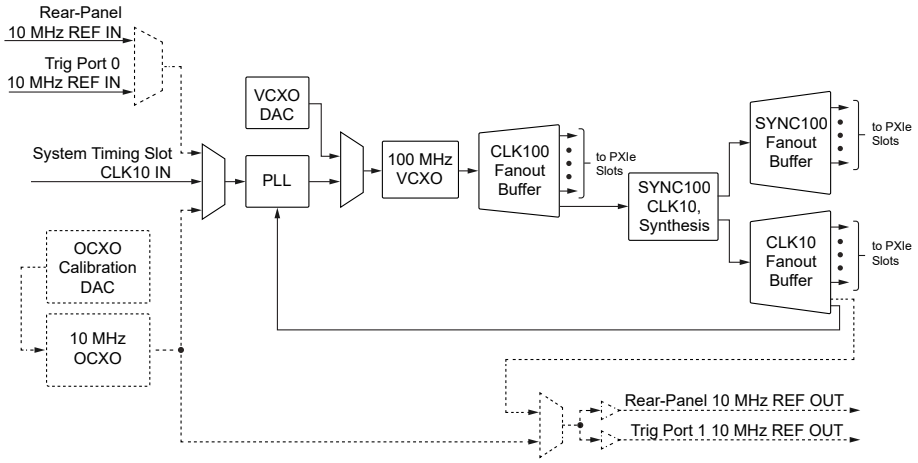

Note Dotted line connections are available only with the Timing and Synchronization upgrade.

An independent buffer (having a source impedance matched to the backplane and a skew of less than 250 ps between slots) drives PXI_CLK10 to each slot. You can use this common reference clock signal to synchronize multiple modules in a measurement or control system.

An independent buffer drives PXIe_CLK100 to each peripheral slot. These clocks are matched in skew to less than 100 ps. The differential pair must be terminated on the peripheral with LVPECL termination for the buffer to drive PXIe_CLK100 so that when there is no peripheral or a peripheral that does not connect to PXIe_CLK100, there is no clock being driven on the pair to that slot. Refer to the following figure for a termination example.

An independent buffer drives PXIe_SYNC100 to each peripheral slot. The differential pair must be terminated on the peripheral with LVPECL termination for the buffer to drive PXIe_SYNC100 so that when there is no peripheral or a peripheral that does not connect to PXIe_SYNC100, there is no SYNC100 signal being driven on the pair to that slot.

In summary, PXI_CLK10 is driven to every slot. PXIe_CLK100 and PXIe_SYNC100 are driven to every peripheral slot.

PXI_CLK10, PXIe_CLK100 and PXIe_SYNC100 have the default timing relationship

described in the following figure.

Figure 7. System Reference Clock Default Behavior

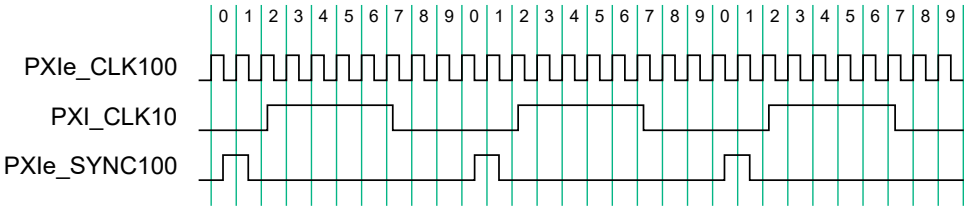

By default PXI_CLK10, PXIe_CLK100, and PXIe_SYNC100 are synchronized to a calibrated 100 MHz VCXO on the backplane. If the Timing and Synchronization upgrade is present, the backplane 100 MHz VCXO will be locked to a 10 MHz OCXO for improved accuracy and frequency stability. Refer to the chassis specifications for more detailed information.

To synchronize the system to an external clock, you can drive PXI_CLK10 from an external source through the PXI_CLK10_IN pin on the System Timing Slot, or from an external SMA connector on the rear of the chassis (Timing and Synchronization upgrade). When an external clock is detected, the backplane automatically phase-locks the PXI_CLK10, PXIe_CLK100, and PXIe_SYNC100 signals to this external clock and distributes these signals to the slots. Refer to the *PXIe-1092 Specifications* section for the specification information for an external clock provided on the PXI_CLK10_IN pin of the System Timing Slot or rear panel SMA. If no external clock is detected, with the Timing and Synchronization upgrade, the backplane will default to the onboard calibrated VCXO or OCXO. If an external clock is detected on the rear of the chassis and no clock is detected on the System Timing Slot PXI_CLK10_IN pin, the backplane will lock its VCXO to the clock present on the rear of the chassis. If a clock is detected on the System Timings Slot PXI_CLK10_IN pin, the backplane will lock to this clock regardless of whether or not a clock is present on the rear panel.

OCXO

With the Timing and Synchronization upgrade, the chassis has an internal precision 10 MHz Oven-Controlled Crystal Oscillator (OCXO) that serves as the default reference for the backplane PLL. The user can still provide a 10 MHz reference via any of the supported input ports if a different reference signal is needed.

The main source of frequency error in reference oscillators is temperature variation. An

OCXO minimizes this error by housing the crystal oscillator circuit inside a sealed oven, which is maintained at a constant temperature higher than the ambient temperature external to the OCXO. This results in a reference oscillator that is several orders of magnitude more stable and accurate than regular crystal oscillators.

Because the OCXO must warm up to a higher temperature than the ambient temperature around it, there is a warm up time required to achieve the specified frequency accuracy. For this reason, to achieve the most stable operation of the OCXO, avoid powering off the OCXO.

The OCXO that the PXIe-1092 uses features electronic frequency control. This allows the OCXO to be fine-tuned by varying the control voltage to the OCXO. The chassis uses a 16-bit digital-to-analog converter (DAC) to give precise control of the tuning voltage. The PXIe-1092 is calibrated during the manufacturing process and should be recalibrated annually to remove frequency error that accumulates over time (such as crystal aging). Refer to the *PXIe-1092 Calibration Procedure* at `ni.com/calibration` for more details.

You also can route the OCXO as the 10 MHz output reference to support systems with tight synchronization requirements.

10 MHz Input Reference

Several options are available to synchronize the system to an external clock:

- Drive a clock from an external source through the PXI_CLK10_IN pin on the System Timing Slot.
- Drive a clock from an external source through the 10 MHz REF IN SMA on the rear of the chassis (Timing and Synchronization upgrade only).
- Connect a high-density trigger cable from the Trig Port 1/10 MHz Ref Out port of another chassis to the Trig Port 0/10 MHz REF IN port of this chassis (Timing and Synchronization upgrade only).

When an external clock is detected on any of these inputs, the backplane automatically phase-locks the PXI_CLK10, PXIe_CLK100, and PXIe_SYNC100 signals to this external clock and distributes these signals to the slots. Refer to the *PXIe-1092 Specifications* for the specification information for an external clock provided on the

PXI_CLK10_IN pin of the system timing slot or rear panel SMA.

If an external clock is present on more than one of these inputs, the signal is selected according to the following table.

Table 3. Backplane External Clock Input Truth Table

System Timing Slot PXI_CLK10_10	Rear 10 MHz REF IN SMA Connector	Trig Port 0/ 10 MHz REF IN Port	Backplane PXI_CLK10, PXIe_CLK100, and PXIe_SYNC100
10 MHz clock present	—	—	Phase-locked to System Timing Slot PXI_CLK10_IN
No clock present	10 MHz clock present	—	Phase-locked to Rear 10 MHz REF IN SMA
No clock present	No clock present	10 MHz clock present	Phase-locked to Trig Port 0/ 10 MHz REF IN Port
No clock present	No clock present	No clock present	Backplane generates its own clocks. If the chassis has the Timing and Synchronization upgrade, the clocks are phase-locked to the OCXO.

10 MHz Output Reference

By default, a copy of the backplane's PXI_CLK10 is exported to the 10 MHz REF OUT SMA connector as well as the Trig Port 1/10 MHz REF OUT port on the rear of the chassis. Independent buffers drive these clocks. Refer to the *PXIe-1092 Specifications* for the rear SMA connector 10 MHz REF OUT signal specification information. This feature is available only with the Timing and Synchronization upgrade.

On a chassis with an OCXO, you also can select the OCXO as the source for the 10 MHz REF OUT signals. One application where this is useful is when you want multiple chassis to share the same timebase and have the same phase offset. In this application, select a chassis with an OCXO to be the master timebase for the system.

On this master chassis, select the OCXO as the source for the 10 MHz REF OUT port. Connect the master chassis 10 MHz REF OUT port to a clock splitter, then route the clock to each chassis' 10 MHz REF IN port (including back to the master chassis). If you use matched-length cables, each chassis in the system is nominally matched in phase.

Installation and Configuration

The following section describes how to prepare and operate the PXIe-1092 chassis.

Before connecting the chassis to a power source, read this section and the *Read Me First: Safety and Electromagnetic Compatibility* document included with your kit.

Unpacking

Carefully inspect the shipping container and the chassis for damage. Check for visible damage to the metal work. Check to make sure all handles, hardware, and switches are undamaged. Inspect the inner chassis for any possible damage, debris, or detached components. If the chassis was damaged during shipment, file a claim with the carrier. Retain the packing material for possible inspection and/or reshipment.

What You Need to Get Started

The PXIe-1092 chassis kit contains the following items:

- PXIe-1092 chassis
- Filler panel
- Software with *PXI Platform Services 17.3* or newer
- Chassis number labels

Note You also will need an AC power cable, sold separately. Refer to the following table for more information about AC power cables.

Table 4. AC Power Cables

Power Cable	Reference Standards
Standard 120 V (USA)	ANSI C73.11/NEMA 5-15-P
Switzerland 220 V	SEV 6534-2
Australia 240 V	AS C112
Universal Euro 230 V	CEE (7), II, IV, VII

Power Cable	Reference Standards
United Kingdom 230 V	BS 1363
Japan 100 V	JIS 8303

If you are missing any of the items or have the incorrect AC power cable, contact NI.

Optional Equipment

Contact NI support to order the following options for the PXIe-1092 chassis.

Related information:

- NI Support

EMC Filler Panels

EMC filler panel kits are available from NI.

Slot Blockers

PXI Slot Blocker kits are available from NI for improved thermal performance when all slots are not used.

Replacement Power Supply

Replacement power supply kits are available from NI.

Replacement Fan Kit

A fan kit available from NI includes both side and PXI module fan assemblies.

Rack Mount Kits

Rack mounting kits are available from NI that can accommodate a variety of rack depths.

Safety Information

Caution Before undertaking any troubleshooting, maintenance, or exploratory procedure, carefully read the following caution notices.

Caution Protection may be impaired if equipment is not used in the manner specified.

This equipment contains voltage hazardous to human life and safety, and is capable of inflicting personal injury.

- Protective Earth—The facility installation must provide a means for connection to protective earth.
- Modification—Do not modify any part of the chassis from its original condition. Unsuitable modifications may result in safety hazards.

Warning High leakage current present when operating dual power supplies at 400 Hz to 440 Hz. When operating dual power supplies within this range, connect the chassis to earth ground before connecting to AC power.

- Protective Earth Terminal Wiring—Qualified personnel must install a protective earthing conductor from the chassis protective earth terminal (using an #8-32 SEMS screw) on the rear to the protective earth wire in the facility.

Grounding wire	2.1 mm^2 (14 AWG)
Ring lug	#8
Protective earth terminal torque	1.13 N · m (10 lb · in.)

- Chassis Grounding—The chassis requires a connection from the premise wire safety ground to the chassis ground. The earth safety ground must be connected during use of this equipment to minimize shock hazards. Refer to the *Connecting Safety Ground* section for instructions on connecting safety ground.
- Live Circuits—Operating personnel and service personnel must not remove protective covers when operating or servicing the chassis. Adjustments and service

to internal components must be undertaken by qualified service technicians. During service of this product, the mains connector to the premise wiring must be disconnected. Dangerous voltages may be present under certain conditions; use extreme caution.
- Explosive Atmosphere—Do *not* operate the chassis in conditions where flammable gases are present. Under such conditions, this equipment is unsafe and may ignite the gases or gas fumes.
- Part Replacement—Only service this equipment with parts that are exact replacements, both electrically and mechanically. Contact NI for replacement part information. Installation of parts with those that are not direct replacements may cause harm to personnel operating the chassis. Furthermore, damage or fire may occur if replacement parts are unsuitable.

Chassis Cooling Considerations

The PXIe-1092 chassis is designed to operate on a bench or in an instrument rack. You must adhere to the cooling clearances as outlined in the following section.

Providing Adequate Clearance

The module and power supply exhaust vents for the PXIe-1092 are on the top of the chassis. The module intake vents are on the rear of the chassis. There are also intake and exhaust vents located along the sides of the chassis.

Adequate clearance between the chassis and surrounding equipment, heat generating devices, and air flow blockages must be maintained to ensure proper cooling. Minimum cooling clearances are shown in the following figure. For rack mount applications adequate forced air ventilation is required. For benchtop applications additional cooling clearances may be required for optimal air flow and reduced hot air recirculation to the air inlet fans.

Figure 8. PXIe-1092 Cooling Clearances

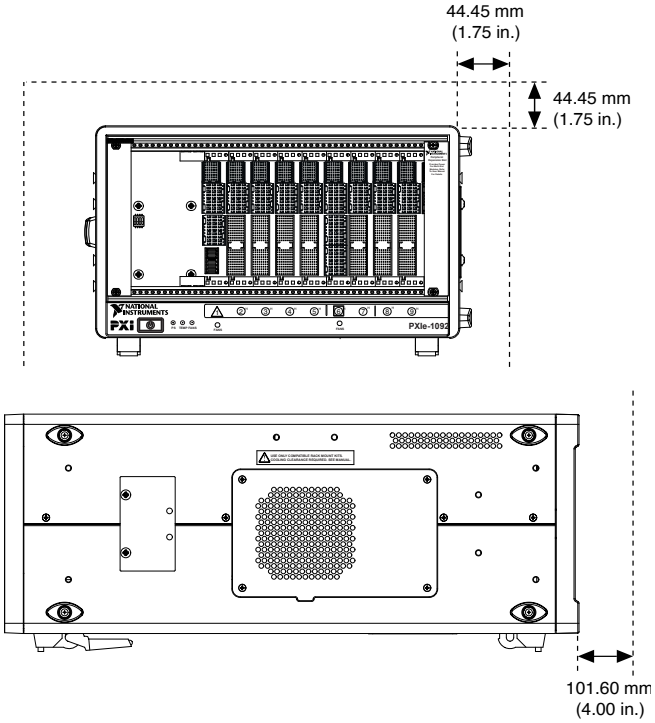

Caution Failure to provide these clearances may result in undesired thermal-related issues with the chassis or modules.

To aid in thermal health monitoring for either rack or benchtop use you can monitor the chassis intake temperatures in Measurement & Automation Explorer (MAX) to ensure the temperatures do not exceed the ratings in the *Operating Environment* section of the *PXIe-1092 Specifications*.

Additionally, many PXI modules provide temperature values you can monitor to ensure critical temperatures are not exceeded. Increasing chassis clearances, ventilation, reducing external ambient temperatures, and removing nearby heat sources are all options for improving overall chassis thermal performance.

The vent locations are shown in the following figure.

Figure 9. PXIe-1092 Vents

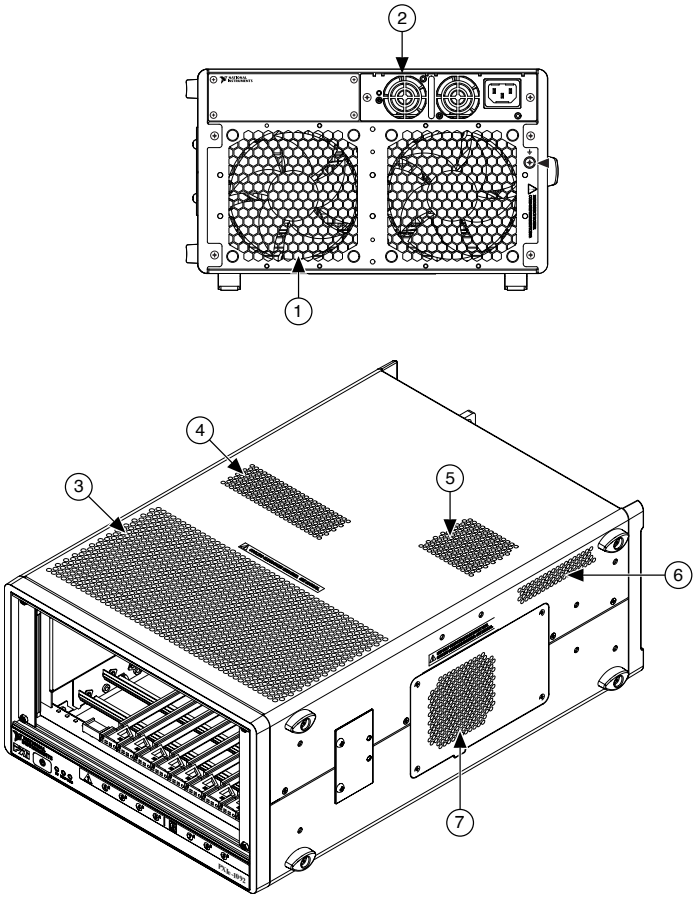

1. PXI Module Air Intake (2x)
2. Power Supply Intake
3. PXI Module Air Exhaust Vent
4. Power Supply Air Exhaust Vent
5. Timing and Synchronization Upgrade Air Exhaust Vent
6. Timing and Synchronization Upgrade Air Intake
7. Side Air Intake Vent (Right)/Side Air Exhaust Vent (Left)

Note The side exhaust vent (not shown) is located on the left side of the chassis.

Chassis Ambient Temperature Definition

The chassis fan control system uses ambient intake air temperatures for controlling fan speeds when in Auto mode. These temperatures may be higher than ambient room

temperature depending on surrounding equipment and/or airflow blockages. Ensure ambient intake temperatures do not exceed the ratings in the *Operating Environment* section of the *PXIe-1092 Specifications*. You can monitor the module ambient intake temperatures in NI Measurement & Automation Explorer (MAX).

Setting Fan Speed

The PXIe-1092 chassis supports multiple fan operating modes. Refer to the *Fan Mode* section for more information.

Installing Filler Panels

To maintain proper module cooling performance, install filler panels (one is provided with the chassis) in unused or empty slots. Secure with the captive mounting screws provided.

Installing Slot Blockers

You can improve the cooling performance of the chassis by installing optional slot blockers. Refer to the NI website at ni.com/r/pxiblocker for more information about slot blockers.

Rack Mounting

Rack mount applications require optional rack mount kits available from NI. Refer to the instructions supplied with the rack mount kits to install your PXIe-1092 chassis in an instrument rack.



Note You must remove the feet and carry handle from the PXIe-1092 chassis when rack mounting.

Figure 10. PXIe-1092 Rack Mount Kit Components

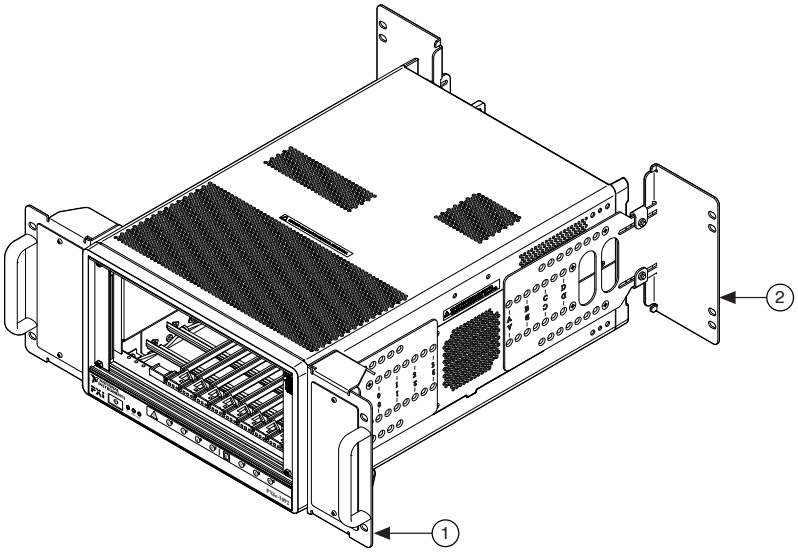

1. Front Rack Mount
2. Rear Rack Mount

Connecting the Safety Ground

Caution The PXIe-1092 chassis are designed with a three-position IEC 60320 C14 inlet for the U.S. that connects the ground line to the chassis ground. For proper grounding, a suitable cordset must be used to connect this inlet to an appropriate earth safety ground.

If your power outlet does not have an appropriate ground connection, you must connect the premise safety ground to the chassis grounding screw located on the rear panel. To connect the safety ground, complete the following steps:

1. Connect a 2.1 mm^2 (14 AWG) grounding wire to the chassis grounding screw (#8-32 SEMS) using an M4 grounding ring lug. The wire must have green insulation with a yellow stripe or must be noninsulated (bare).
2. Attach the opposite end of the wire to permanent earth ground using toothed washers or a toothed lug tightened to 1.13 N · m (10 lb · in.) using an appropriate torque wrench or torque screwdriver.

Connecting to a Power Source

Caution Do not install modules prior to performing the following power-on test. To completely remove power, you must disconnect the AC power cable.

Attach input power through the rear AC inlet using the appropriate AC power cable supplied.

The Power Inhibit switch allows you to power on the chassis or place it in standby mode. With an empty chassis in Default Mode, press down the Power Inhibit switch and hold it down for four seconds. Observe that all fans become operational and all three front panel LEDs are a steady green. Pressing and holding the Power Inhibit switch again for four seconds will return the chassis to standby.

Installing a System Controller

This section contains general installation instructions for installing a PXI Express system controller in a PXIe-1092 chassis.

Note Refer to your PXI Express system controller user manual for specific instructions and warnings.

Caution Be sure the chassis is connected to an AC power source before installing the system controller. The AC power cord grounds the chassis and protects it from electrical damage while you install the controller.

1. Inspect the slot 1 pins on the chassis backplane for any bending or damage prior to installation. Do not install the system controller if any pins are bent or damaged.
2. Install the system controller into the system controller slot (slot 1, indicated by the red card guides) by first placing the system controller PCB into the front of the card guides (top and bottom). Slide the system controller to the rear of the chassis, making sure the injector/ejector handle is pushed down as shown in the following figure.

Figure 11. Installing a PXI Express System Controller

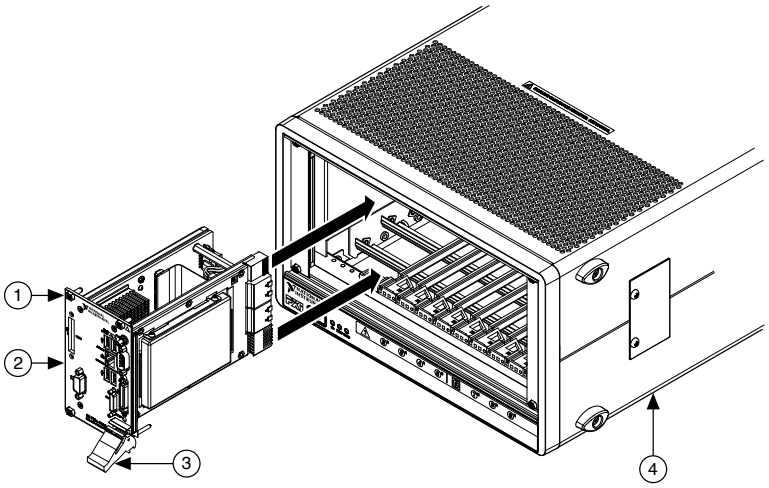

1. System Controller Front Panel Mounting Screws (4x)
2. PXI Express System Controller
3. Injector/Ejector Handle
4. PXI Express Chassis

3. When you begin to feel resistance, pull up on the injector/ejector handle to seat the system controller fully into the chassis frame. Secure the system controller front panel to the chassis using the system controller front panel mounting screws.
4. Connect the keyboard, mouse, and monitor to the appropriate connectors. Connect devices to ports as required by your system configuration.
5. Power on the chassis. Verify that the system controller boots. If the system controller does not boot, refer to the *Troubleshooting* section or your system controller user manual.

Installing Peripheral Modules

Caution The PXIe-1092 chassis has been designed to accept a variety of peripheral module types in different slots. To prevent damage to the chassis, ensure that the peripheral module is being installed into a slot designed to accept it.

Note Refer to your module user manual for specific instructions and

warnings.

This section contains general installation instructions for installing a peripheral module in a PXIe-1092 chassis. To install a module, complete the following steps:

1. Connect the AC power source to the PXI Express chassis before installing the module. The AC power cord grounds the chassis and protects it from electrical damage while you install the module.
2. Power off the chassis.
3. Inspect the slot pins on the chassis backplane for any bending or damage prior to installation. Do not install a module if the backplane is damaged.
4. To prevent damage to the chassis, ensure that you are installing the module in the correct type of slot. Refer to the *Chassis Parts* section for the slot descriptions.
5. Install the module into the chassis slot by first placing the module card PCB into the front of the card guides (top and bottom), as shown in the following figure. Slide the module to the rear of the chassis, making sure that the injector/ejector handle is pushed down.

   Figure 12. Installing PXI, PXI Express, or CompactPCI Peripheral Modules

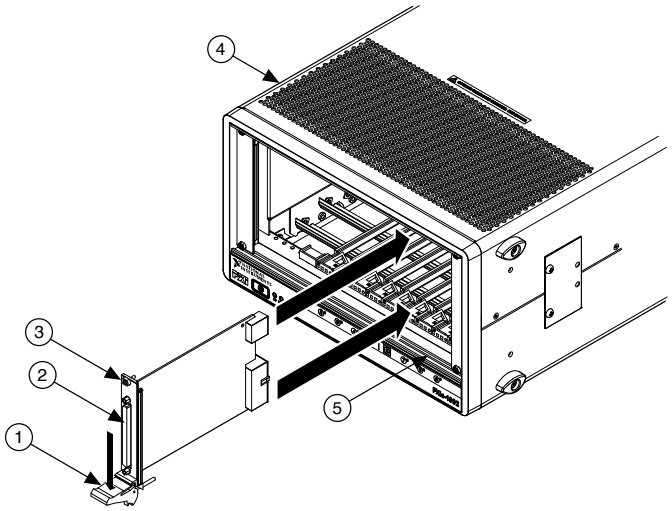

   1. Injector/Ejector Handle
   2. PXI Peripheral Module
   3. Peripheral Module Front Panel Mounting Screws (2x)
   4. PXIe-1092 Chassis
   5. Injector/Ejector Rail
6. When you begin to feel resistance, push up on the injector/ejector handle to seat the module fully into the chassis frame. Secure the module front panel to the chassis using the module front-panel mounting screws.

Installing Peripheral Modules in the Peripheral Expansion Slot

Caution The PXIe-1092 chassis has been designed to accept a variety of peripheral module types in different slots. To prevent damage to the chassis, ensure that the peripheral module is being installed into a slot designed to accept it.

Note The peripheral expansion slot does not provide PCI/PXI Express communication and timing signals. The peripheral expansion slot provides power and connector alignment to allow a multiple slot peripheral module to expand to the right and avoid covering up a peripheral slot.

Note The peripheral expansion slot in a Revision B or newer chassis provides (in addition to power and connectors for alignment) PXI_CLK10, PXIe_CLK100, and PXIe_SYNC100 signals.

Note Refer to your module user manual for specific instructions and warnings.

The following section contains installation instructions for installing a multiple-slot wide peripheral module that expands to the right in a PXIe-1092 chassis utilizing the peripheral expansion slot. To install a multiple-slot module, complete the following steps:

1. Connect the AC power source to the PXI Express chassis before installing the module. The AC power cord grounds the chassis and protects it from electrical damage while you install the module.
2. Power off the chassis.
3. Remove the cover panel from the peripheral expansion slot.
4. Inspect the slot pins on the chassis backplane for any bending or damage prior to installation. Do not install a module if the backplane is damaged.
5. To prevent damage to the chassis, ensure that you are installing the multiple slot peripheral module in the correct type of slot. Refer to the *PXIe-1092 Backplane*

Overview section for the slot descriptions.

6. Install the module in the chassis by aligning the module so that the right-most portion of the multiple-slot peripheral module will occupy the slot peripheral expansion slot.
7. When you begin to feel resistance, push up on the injector/ejector handle to seat the module fully into the chassis frame. Secure the module front panel to the chassis using the module front-panel mounting screws.

Note Do not install a single-slot wide peripheral module in the peripheral expansion slot as it will not be functional.

Figure 13. Installing a Multiple-Slot Module Utilizing the Peripheral Expansion Slot

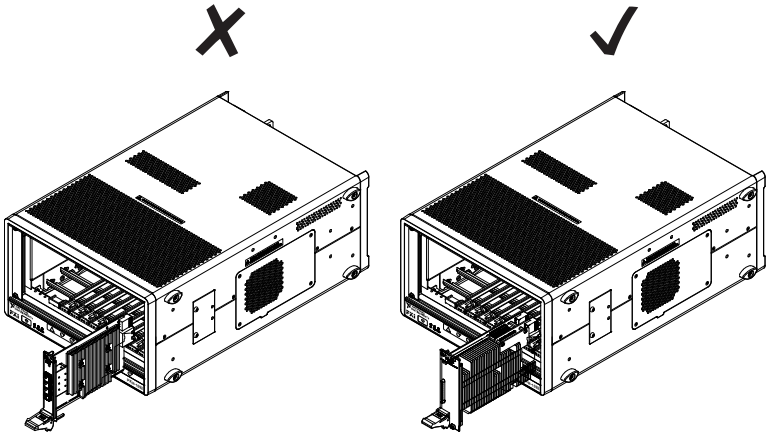

LED Indicators

The following figure shows the front panel LEDs. The following table describes the LED states.

Figure 14. Front Panel LEDs

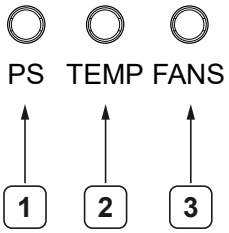

1. Power Supply LED
2. Temperature LED

3. Fan LED

Table 5. Front Panel LED States

LED	State	Description
Power Supply LED	Off	Chassis is powered off.
	Steady green	Chassis power supply or supplies are active, and operating normally.
	Steady red	The chassis power supply has failed.
Temperature LED	Off	Chassis is powered off.
	Steady green	Intake or exhaust temperature is within chassis operating range.
	Steady red	Intake or exhaust temperature is outside of chassis operating range.
Fan LED	Off	Chassis is powered off.
	Steady green	All chassis fans are enabled and operating normally.
	Steady red	One or more chassis fans have failed.
All LEDs	Blinking red	An internal chassis fault has occurred.

The chassis power supply has a single LED that indicates the health of that supply. The following table describes the rear panel LED states. Refer to Figure 2, *Rear View of the PXIe-1092*, for LED location.

Table 6. Rear Power Supply LED States

State	Description
Off	Power supply is unplugged or in standby.
Steady green	Main power is active and supply is operating normally.

State	Description
Blinking red	Power supply is operating outside of specification.
Steady red	Power supply has failed.

DIP Switches

The backplane has a DIP switch that may be used to control chassis behavior.

DIP switch #1 (first from the left) controls the chassis fan mode. When this switch is in the off (down) position, Auto mode is selected. When this switch is in the on (up) position, High mode is selected.

DIP switch #2 (second from the left) controls the chassis Inhibit Mode. When this switch is in the off (down) position, Default mode is selected. When this switch is in the on (up) position, Manual mode is selected.

Figure 15. Backplane DIP Switches

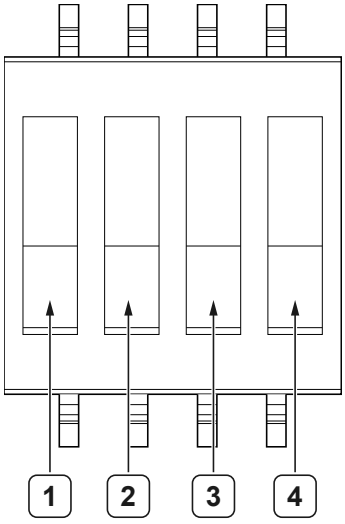

1. Switch #1 (Fan)
2. Switch #2 (PWR)
3. Switch #3 (NC)
4. Switch #4 (NC)

Table 7. DIP Switch States

Location	Switch	State	Description
1	FAN	Off (Down)	Sets chassis Fan Mode to Auto.
		On (Up)	Sets chassis Fan Mode to High.
2	PWR	Off (Down)	Sets chassis Inhibit Mode to Default.
		On (Up)	Sets chassis Inhibit Mode to Manual.
3	NC	—	—
4	NC	—	—

Inhibit Mode

The PXIe-1092 chassis supports operation in two inhibit modes. Default mode is used when normal power inhibit button functionality is desired. In Default mode, when a system controller is installed in slot 1 of the chassis, the user can press the power inhibit button to power on the chassis.

Note In Default mode, you can also power on the chassis without a system controller installed in slot 1. To power on the chassis from standby, press and hold the power inhibit button for 4 seconds. To power off the chassis, again press and hold the power inhibit button for 4 seconds.

Manual mode is used when you would like to manually control the inhibit state of the chassis. In Manual mode, driving the Remote Inhibit signal high or floating it will cause the chassis to be powered on. Driving the Remote Inhibit signal low or shorting it to ground will cause main power to be inhibited.

Note The Timing and Synchronization upgrade is required for access to the Remote Inhibit signal. Without this upgrade, a chassis in Manual mode will always be powered on when AC power is connected.

Inhibit Mode Selection

You can select the chassis Inhibit Mode using Measurement & Automation Explorer (MAX). Refer to the *Inhibit Mode Configuration in MAX* section for more information.

You also can select the chassis Inhibit Mode on the PXIe-1092 chassis using a DIP switch on the backplane. Refer to the *DIP Switches* section for more information about DIP switch settings. Refer to Figure 1, *Front View of the PXIe-1092*, for the switch location.

Note The DIP switch must be in the Default position for software configuration in MAX to work. If the DIP switch is in the Manual position, the Inhibit Mode will be Manual regardless of the software setting.

Fan Mode

The PXIe-1092 chassis operates in two main fan modes.

In Auto mode, the chassis intake air temperature determines the chassis fans' speed. Select Auto mode for improved acoustic performance.

In High mode, the chassis fans' speed is fixed at high speed regardless of chassis intake air temperature. Select High mode for maximum cooling performance.

Cooling Profiles

Both fan modes are available within the 38 W and 58W/82 W cooling profiles.

- 38 W cooling profile supports NI modules up to 38 W max power dissipation.
- 58W/82 W cooling profile supports NI modules up to 58 W max power dissipation from 0 °C to 55 °C, and NI modules up to 82 W max power dissipation from 0 °C to 40 °C.

Note Refer to Operating Environment requirements in the *PXIe-1092 Specifications* for more information about chassis ambient temperature

range and cooling capacity.

Fan Mode Selection

The chassis fan mode can be selected using Measurement & Automation Explorer (MAX). Refer to the *Fan Configuration in MAX* section for more information.

Alternatively, the fan mode on the PXIe-1092 chassis is selected using a DIP switch on the backplane. Refer to the *DIP Switches* section for more information about the DIP switch.

Note The DIP switch must be in the Auto position for software configuration in MAX to work. If the DIP switch is in the High position, the chassis fan mode will be High regardless of the software setting.

PXI_CLK10 Rear Panel Connectors

With the Timing and Synchronization upgrade, there are two SMA connectors on the rear of the chassis for PXI_CLK10. The connectors are labeled 10 MHz REF IN and OUT. You can use them for supplying the backplane with PXI_CLK10 or routing the backplane's PXI_CLK10 to another chassis. Refer to the *System Reference Clock* section for details about these signals.

High-Density Triggers

With the Timing and Synchronization upgrade, the PXIe-1092 supports routing PXI triggers between chassis using a pair of high-density trigger connectors on the rear of the chassis.

The following table shows the high-density trigger connector pinout.

Table 8. High-Density Trigger Connector Pinout

Pin	Signal Top Port	Signal Bottom Port
1	Trig(0)	

Pin	Signal Top Port	Signal Bottom Port
2	Logic Ground	
3	Trig(4)	
4	Trig(1)	
5	Logic Ground	
6	Trig(5)	
7	Trig(2)	
8	Logic Ground	
9	Trig(6)	
10	10 MHz Ref In +	10 MHz Ref Out +
11	Logic Ground	
12	10 MHz Ref In -	10 MHz Ref Out -
13	Reserved	
14	Trig(3)	
15	SCL	
16	SDA	
17	Logic Ground	
18	Presence Detect	
19	Trig(7)	

Figure 16. High-Density Trigger Ports

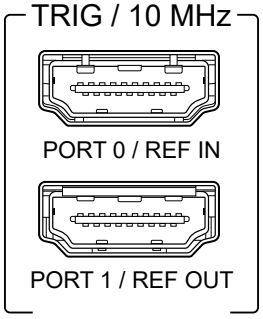

Routing triggers between chassis requires using a NI API such as NI-DAQmx. You can target the individual pins of each trigger port as sources or destinations for PXI triggers

to or from a PXI module. If the chassis are connected to the same host via MXI, targeting these pins is not necessary; you can specify a source device in one chassis and a destination device in another chassis, and the software makes the necessary trigger routes automatically.

Notice The high-density trigger ports are not HDMI interfaces. Do not connect the high-density trigger ports on the PXIe-1092 to the HDMI interface of another device. NI is not liable for any damage resulting from such signal connections.

Notice You can use off-the-shelf HDMI cables to connect adjacent chassis. However, because off-the-shelf cables may be of varying quality, for best performance use NI-recommended cables available at ni.com.

Notice For proper operation, you must cable the Port 1/Ref Out port of one chassis to Port 0/Ref In of the adjacent chassis. Do not connect Port 0/Ref In to Port 0/Ref In of another chassis. Do not connect Port 1/Ref Out to Port 1/Ref Out of another chassis. While no damage will occur in either of these configurations, the trigger routing capabilities will not be functional.

Note You can route triggers either direction out of either trigger port.

Remote Inhibit and Chassis Monitoring

With the Timing and Synchronization upgrade, the PXIe-1092 chassis supports remote voltage monitoring and inhibiting through a female 15-pin connector on the rear panel. The following table shows the 15-pin connector pinout.

Table 9. Remote Inhibit and Chassis Monitoring Connector Pinout

Pin	Signal
1	Logic Ground
2	+5 V
3	Fault (Active High)

Pin	Signal
4	+3.3 V
5	Inhibit (Active Low)
6	+12 V
7	Key
8	-12 V
9	Logic Ground
10	PFI3
11	PFI2
12	Logic Ground
13	PFI1
14	PFI0
15	Logic Ground

PFI / INHIBIT /
VOLTAGE MON

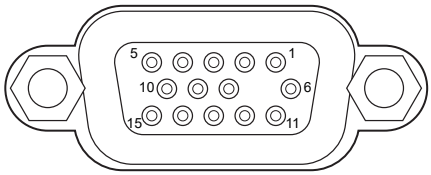

You can use a digital voltmeter to ensure all chassis voltage levels are within the allowable limits. Referring to the previous table, connect one voltmeter lead to a supply pin on the 15-pin remote voltage monitoring connector on the rear panel. Connect the voltmeter reference lead to one of the ground pins. Compare each voltage reading to the values in the following table.

Caution When connecting digital voltmeter probes to the rear 15-pin connector, be careful not to short the probe leads together.

Note Use the rear-panel 15-pin connector only to check voltages. Do not use the connector to supply power to external devices.

Table 10. Power Supply Voltages at Chassis Monitoring Connector

Pin	Supply	Acceptable Voltage Range
2	+5 V	4.75 V to 5.25 V
4	+3.3 V	3.135 V to 3.465 V
6	+12 V	11.4 V to 12.6 V
8	-12 V	-12.6 V to -11.4 V
1, 9, 12, 15	Logic Ground	0 V

If the voltages fall within the specified ranges, the chassis complies with the CompactPCI voltage-limit specifications.

You can use the Inhibit signal to control the chassis inhibit state manually when the inhibit mode is set to Manual. Refer to the *Inhibit Mode* section for more information. Refer to the *PXIe-1092 Specifications* for the Inhibit signal input requirements.

The Fault signal indicates when a fault condition is detected on the chassis. The signal definition is shown in the following table. Refer to the *PXIe-1092 Specifications* for the Fault signal voltage specifications.

Table 11. Fault Signal Definition

State	Description
Low	Chassis is operating normally
High	An abnormal operating condition has been detected

Examples of abnormal operating conditions include but are not limited to: intake or exhaust temperature outside of chassis operating range, a chassis fan has failed, or a chassis voltage is outside its specified operating range.

You can use the four Programmable Function Interface (PFI) lines to route triggers to/from PXI modules in the chassis. Routing triggers to the PFI lines requires using an NI API such as NI-DAQmx. You can target the individual PFI lines as sources or destinations for PXI triggers to or from a PXI module. Refer to the *PXIe-1092 Specifications* for the PFI line input and output specifications.

Note An optional DSUB-to-BNC cable (NI Part Number 149055-0R2) that interfaces with the remote inhibit and chassis monitoring port is available from NI. The cable enables use of the inhibit, fault, and PFI 0-3 lines through BNC.

Figure 17. Optional DSUB-to-BNC Cable

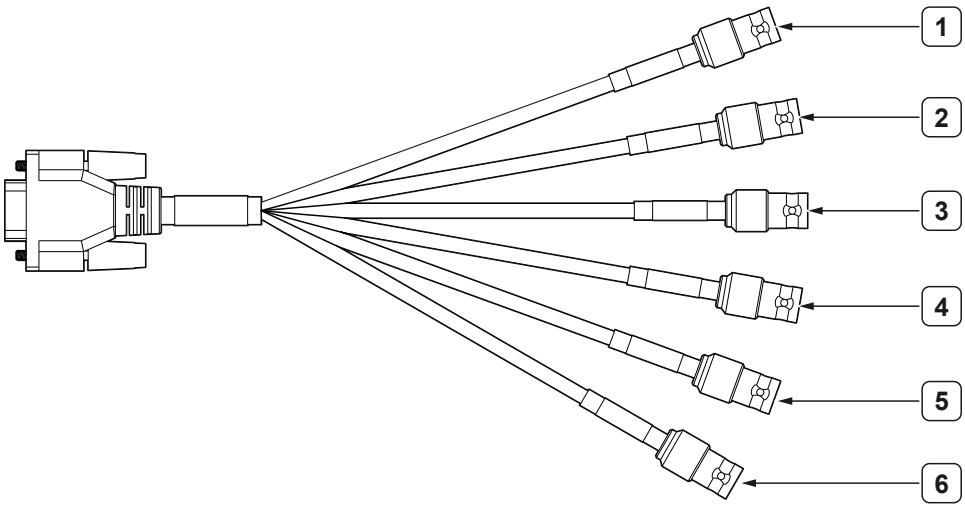

1. Fault (Active High)
2. Inhibit (Active Low)
3. PFI 0
4. PFI 1
5. PFI 2
6. PFI 3

USB Port

With the Timing and Synchronization upgrade, the PXIe-1092 has a single USB 3.0 Type A port on the rear of the chassis. The following table lists and describes the USB 3.0 connector signals.

Table 12. USB 3.0 Connector Signals

Pin	Signal Name	Signal Description
1	VBUS	Cable Power (+5 V)
2	Data-	USB Data–

Pin	Signal Name	Signal Description
3	Data+	USB Data+
4	GND	Ground
5	StdA_SSRX–	USB Data Receive–
6	StdA_SSRX	USB Data Receive+
7	GND DRAIN	Ground
8	StdA_SSTX–	USB Data Transmit–
9	StdA_SSTX+	USB Data Transmit+

The PXIe-1092 chassis uses a Texas Instruments TUSB7340 USB 3.0 Host Controller as the interface for the rear USB port.

Note Drivers for this device are required for Windows 7 and are available for download at `www.ti.com/lit/zip/sllc423`.

PXI Express System Configuration with MAX

The PXI Platform Services software included with your chassis automatically identifies your PXI Express system components to generate a `pxiesys.ini` file. You can configure your entire PXI system and identify PXI-1 chassis through Measurement & Automation Explorer (MAX), included with your system controller. PXI Platform Services creates the `pxiesys.ini` and `pxisys.ini` file, which define your PXI system parameters.

Note The configuration steps for single or multiple-chassis systems are the same.

MAX provides the following chassis information:

- Asset information, such as serial number or part number
- Chassis number
- Voltages, temperatures, and fan speed
- Fan and cooling settings

- Slot details
- Chassis self-test
- Firmware update

Note Information available through MAX may vary based on your chassis variant or firmware and platform services version.

Trigger Configuration in MAX

PXI Platform Services provides an interface to route and reserve triggers so dynamic routing, through drivers such as DAQmx, avoids double-driving and potentially damaging trigger lines. For more information about routing and reserving PXI triggers, refer to ni.com/r/pxitiming.

Each chassis has one or more trigger buses, each with eight lines numbered 0 through 7 that can be reserved and routed statically or dynamically. Static reservation *pre-allocates* a trigger line to prevent its configuration by a user program. Dynamic reservation/routing/deallocation is *on the fly* within a user program based on NI APIs such as NI-DAQmx. NI recommends dynamic reservations and routing are used whenever possible. If static reservations are required, static reservation of trigger lines can be implemented by the user in MAX through the Triggers tab. PXI modules dynamically configured by programs such as NI-DAQmx will not use reserved trigger lines. This prevents the instruments from double-driving the trigger lines, possibly damaging devices in the chassis. In the default configuration, trigger lines on each bus are independent. For example, if trigger line 3 is asserted on trigger bus 0, by default it is not asserted automatically on any other trigger bus.

Complete the following steps to reserve these trigger lines in MAX.

1. In the Configuration tree, click the PXI chassis branch to configure.
2. In the lower right pane, click the Triggers tab.
3. Select the trigger lines to statically reserve.
4. Click the Save button.

Figure 18. Trigger Configuration in MAX

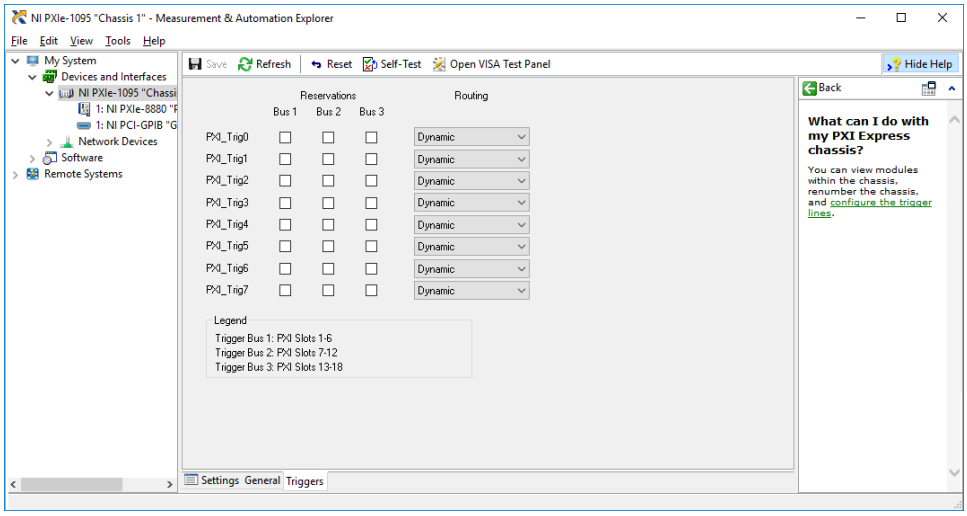

PXI Trigger Bus Routing

Some NI chassis, such as the PXIe-1092, have the capability to route triggers from one bus to others within the same chassis using the **Trigger Routing** tab in MAX.

Note Selecting any non-disabled routing automatically reserves the line in all trigger buses being routed to. If you are using NI-DAQmx, it will reserve and route trigger lines for you, so you won't have to route trigger lines manually.

Complete the following steps to configure trigger routings in MAX.

1. In the **Configuration** tree, select the chassis in which you want to route trigger lines.
2. In the right-hand pane, select the **Trigger Routing** tab near the bottom.
3. For each trigger line, select **Away from Bus 1**, **Away from Bus 2**, or **Away from Bus 3** to route triggers on that line in the described direction, or select **Dynamic** for the default behavior with no manual routing.
4. Click the **Save** button.

Inhibit Mode Configuration in MAX

You can configure inhibit mode behavior using software settings in MAX. The PXIe-1092 supports both Default and Manual inhibit modes. Refer to the *Inhibit Mode* section for

more information about these modes.

Complete the following steps to change the chassis inhibit mode in MAX:

1. In the Configuration tree, select the PXI chassis you want to configure.
2. In the right-hand pane, click the Settings tab.
3. In the Power Supplies group, select the desired Inhibit Mode using the drop-down menus.
4. Click the Save button.

Fan Configuration in MAX

You can configure fan behavior using software settings in MAX.

The PXIe-1092 supports both Auto and High fan modes for both the 38 W and 58 W cooling profiles. Refer to the *Fan Mode* section for more information about these modes.

You may also select a Manual fan mode. In this mode, you may manually set the fan speeds to achieve the desired performance.



Note You may not set the fan speeds or power settings lower than the minimum level required to maintain required cooling levels.

Complete the following steps to change the fan settings in MAX .

1. In the Configuration tree, click on the PXI chassis you want to configure.
2. In the right-hand pane, click on the Settings tab.
3. In the Fans group, select the desired Mode and Cooling Profile using the drop-down menus.
4. Click the Save button. Shortly after clicking the Save button, you should see the fan speeds change.

Using System Configuration and Initialization Files

The PXI Express specification allows many combinations of PXI Express chassis and

system modules. To assist system integrators, the manufacturers of PXI Express chassis and system modules must document the capabilities of their products. The minimum documentation requirements are contained in `.ini` files, which consist of ASCII text. System integrators, configuration utilities, and device drivers can use these `.ini` files.

The capability documentation for the PXIe-1092 chassis is contained in the `chassis.ini` file on the software media that comes with the chassis. The information in this file is combined with information about the system controller to create a single system initialization file called `pxisys.ini` (PXI System Initialization). The system controller manufacturer either provides a `pxisys.ini` file for the particular chassis model that contains the system controller or provides a utility that can read an arbitrary `chassis.ini` file and generate the corresponding `pxisys.ini` file. System controllers from NI provide the `pxisys.ini` file for the PXIe-1092 chassis, so you should not need to use the `chassis.ini` file. Refer to the documentation provided with the system controller or to ni.com/support for more information on `pxisys.ini` and `chassis.ini` files.

Device drivers and other utility software read the `pxisys.ini` file to obtain system information. The device drivers should have no need to directly read the `chassis.ini` file. For detailed information regarding initialization files, refer to the PXI Express specification at `www.pxisa.org`.

Maintenance

This section describes basic maintenance procedures you can perform on the PXIe-1092 chassis.

Caution Disconnect the power cable prior to servicing your PXIe-1092 chassis.

Service Interval

Clean dust from the chassis exterior (and interior) as needed, based on the operating environment. Periodic cleaning increases reliability.

Preparation

The information in this section is designed for use by qualified service personnel. Read the *Read Me First: Safety and Electromagnetic Compatibility* document included with your kit before attempting any procedures in this section.

Note Many components within the chassis are susceptible to static discharge damage. Service the chassis only in a static-free environment. Observe standard handling precautions for static-sensitive devices while servicing the chassis. *Always* wear a grounded wrist strap or equivalent while servicing the chassis.

Cleaning

Cleaning procedures consist of exterior and interior cleaning of the chassis and cleaning the fan filters. Refer to your module's user documentation for information about cleaning individual CompactPCI or PXI Express modules.

Caution Always disconnect the power cable prior to servicing the chassis.

Interior Cleaning

Use a dry, low-velocity stream of air to clean the interior of the chassis. Use a soft-bristle brush for cleaning around components.

Exterior Cleaning

Clean the exterior surfaces of the chassis with a dry, lint-free cloth or a soft-bristle brush. If any dirt remains, wipe with a cloth moistened in a mild soap solution. Remove any soap residue by wiping with a cloth moistened with clear water. Do not use abrasive compounds on any part of the chassis.

Caution Avoid getting moisture inside the chassis during exterior cleaning, especially through the top vents. Use just enough moisture to dampen the cloth.

Do not wash the front- or rear-panel connectors or switches. Cover these components while cleaning the chassis.

Do not use harsh chemical cleaning agents; they may damage the chassis. Avoid chemicals that contain benzene, toluene, xylene, acetone, or similar solvents.

Maintaining Forced-Air Cooling

Inadequate air circulation can cause the temperature within a PXI chassis to rise above the maximum recommended operating temperature for your PXI/PXI Express module. Overheating can cause a thermal shutdown or damage to the PXI/PXI Express module.

Ensure the ambient temperature of your PXI system is within the specifications for all of the system components. Ensure the ambient temperature provides adequate cooling clearances for your chassis to achieve the required airflow through the chassis.

Note The ambient temperature of a PXI system is defined as the temperature at the chassis fan inlet (air intake).

Follow these guidelines to maintain optimal forced-air cooling for PXI and PXI Express modules in the chassis:

- NI highly recommends installing slot blockers in unused slots to maximize airflow in the slots populated with instrumentation.
- Install filler panels over slot blockers and unused slots.
  Missing filler panels disrupt the necessary air circulation in the chassis.
- Install your chassis so cooling clearances meet the specifications stated in the specifications.
  Allow space around the chassis fan intake and exhaust vents; if you remove the chassis feet, allow for adequate clearance below the chassis. Blocked fan vents impede the airflow needed for cooling.
- For rackmount PXI deployments, follow these guidelines:
  - Place high-power units within the rack above the PXI system where possible.
  - Use racks with open sides and/or rear panels.
  - Use fan trays within the rack, and at the top and bottom of the rack, to increase overall airflow and reduce ambient temperatures within the rack.
  - Use other methods that reduce ambient temperature within the rack.
- If your chassis includes fan filters, clean them at least every six months.
  Depending on the amount of chassis use and the ambient dust levels, filters may require more frequent cleaning. If regular maintenance of dirty or clogged filters is not possible, you can remove foam filters to maintain adequate cooling.
- Set all chassis fans to high unless directed otherwise by the PXI or PXI Express module documentation; do not disable the fan(s).
- Ensure the ambient temperature does not exceed the rated ambient temperature specification.
  Refer to the chassis temperature LED, if available, or use a temperature probe to verify temperature.

Related tasks:

- Installing PXI Slot Blockers
- Installing PXI Filler Panels

Installing PXI Slot Blockers

PXI slot blockers improve system cooling in PXI chassis by rerouting airflow from

empty slots to slots containing PXI modules.

NI recommends using PXI slot blockers with standard or EMC filler panels to improve cooling performance for all PXI chassis.

> **Notice** NI highly recommends installing PXI slot blockers if your PXI chassis features rear fans.

You can order PXI slot blockers (NI part number 199198-01) on `ni.com`.

To install PXI slot blockers in your PXI chassis, complete the following steps.

1. Install a PXI slot blocker in each empty slot of your PXI chassis.
   Figure 19. Slot Blocker Installation

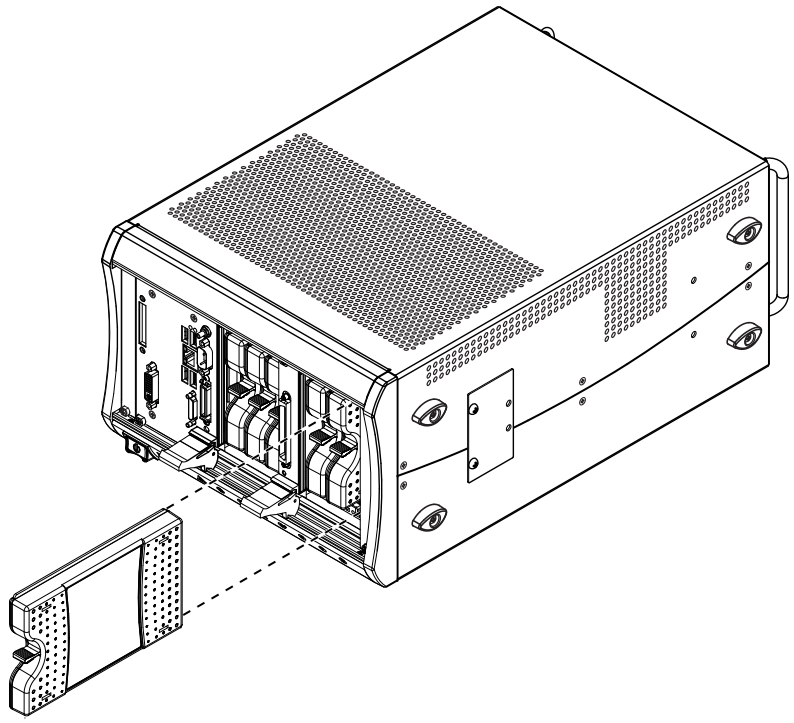

2. Install PXI filler panels over each slot containing a PXI slot blocker.

Related tasks:

- Installing PXI Filler Panels

Installing PXI Filler Panels

To ensure proper cooling, install standard filler panels or EMC filler panels over each empty slot of a PXI chassis.

Filler panels improve the cooling performance of the system. EMC filler panels contain additional gaskets to control EMC emissions from the chassis. Some PXI/PXI Express modules require EMC filler panels to meet specification conditions.

Note To ensure adequate cooling of modules, you must install filler panels over all chassis slots. To ensure optimal cooling performance, NI recommends using slot blockers with filler panels.

For more information about PXI filler panels, visit `ni.com/r/emcpanels`.

1. Remove the captive screw covers, if present, from the filler panel.
2. Secure the captive mounting screws to the chassis.

   Note Do not overtighten the screws (2.5 in. · lb maximum).

   When installing EMC filler panels, ensure that the EMC gasket is on the right side as shown in the following figure.

Figure 20. EMC Filler Panel Installation

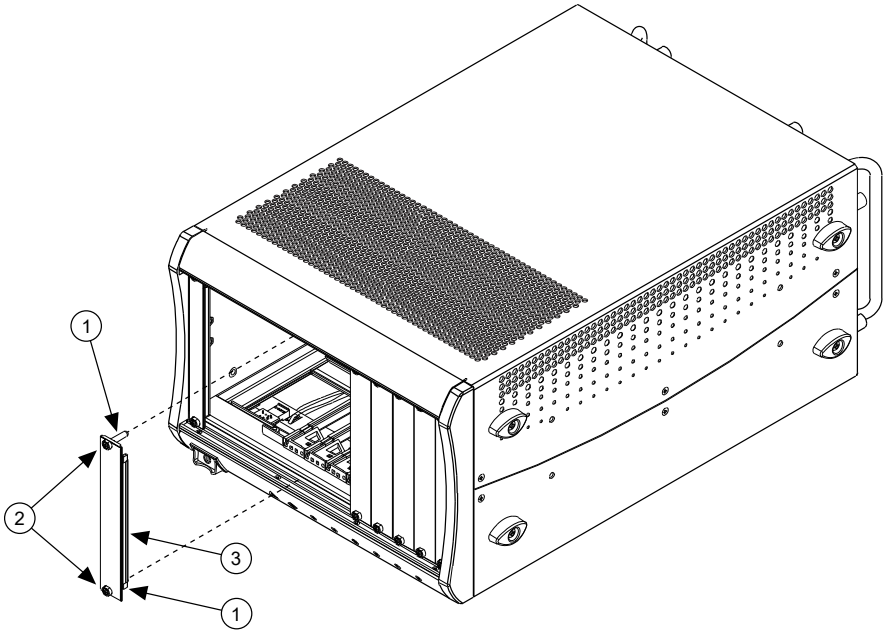

1. Captive screw covers
2. Captive mounting screws
3. EMC gasket

When installing standard filler panels, install as shown in the following figure.

Figure 21. Standard Filler Panel Installation

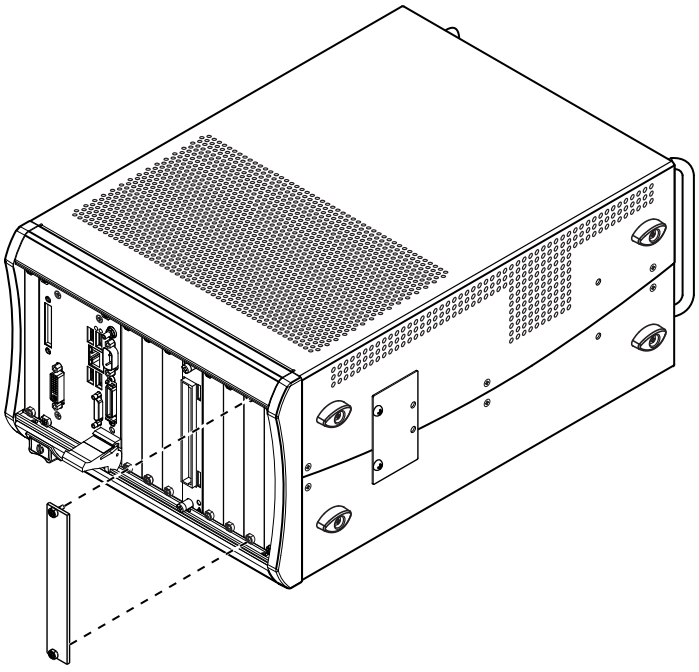

Related tasks:

- Installing PXI Slot Blockers

Related information:

- Standard or EMC Filler Panels for My PXI Chassis

Replacing the Power Supply

This section describes how to remove, configure, and install the AC power supply in the PXIe-1092 chassis.

Caution Disconnect the power cable prior to replacing the power supply.

Before connecting the power supply shuttle to a power source, read this section and the *Read Me First: Safety and Electromagnetic Compatibility* document included with the kit.

Removal

The PXIe-1092 power supply is a replacement part for the PXIe-1092 chassis. Before attempting to replace the power supply, verify there is adequate clearance behind the chassis. Disconnect the power cable from the power supply on the back of the chassis. Identify the two mounting screws for the PXIe-1092 that attach the power supply to the chassis. Refer to the *Rear View of the PXIe-1092 Chassis* figure, for the screw locations. Using a Phillips screwdriver, remove the screws. Pull on the two rear handles of the power supply to remove it from the back of the chassis.

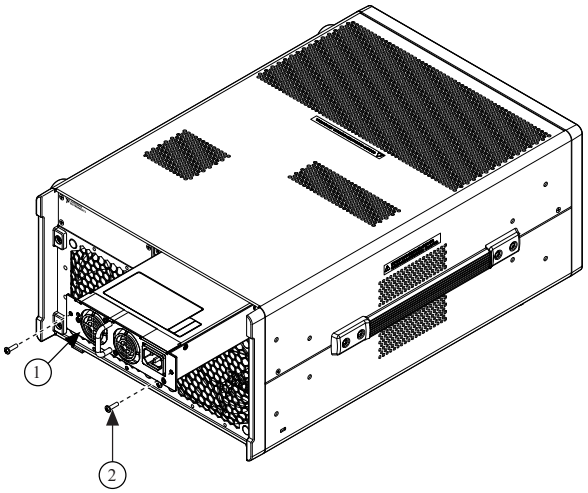

1. Power Supply
2. Power Supply Screws (2x)

Installation

Note The power supply should be disconnected from AC power for at least 30 seconds before it is installed in the chassis.

Ensure that there is no visible damage to the new power supply. Verify that the housing and connector on the new power supply assembly have no foreign material inside. Install the new power supply into the chassis in the reverse order of removal. Replace and tighten two #6-32 screws with a Phillips screwdriver. Connect the AC inlet power cable.

To meet the Shock and Vibration specifications listed in the *PXIe-1092 Specifications*, tighten screws to 1.3 N · m (11.5 in · lb) of torque.

Installing Replacement Fan Assemblies

This section describes how to remove and install fan assemblies in the PXIe-1092 chassis.

Caution Disconnect the power cable and wait at least 30 seconds prior to replacing fan assemblies.

Replacing the PXI Module Fan Assembly

Before attempting to replace the rear module fan assembly, verify that there is adequate clearance behind the chassis. Disconnect the power cable from the power supply on the back of the chassis. Wait at least 30 seconds for the supply's internal power to dissipate.

Removing the PXI Module Fan Assembly

Follow these steps to remove the fan assembly:

1. Using a Phillips screwdriver, remove the six #6-32 mounting screws and #8-32 ground screw that attach the fan panel to the chassis.
2. Remove rear chassis feet.
3. With the internal fan harness still connected, carefully pull and rotate fan assembly from rear cavity of chassis. Use caution when removing the fan assembly to avoid damaging the fan wire harness.
4. Disconnect fan harness from the internal chassis receptacle as shown in the following figure.

Installing the PXI Module Fan Assembly

Follow these steps to install a new fan assembly:

1. Angle the fan assembly to install the fan harness plug into the internal chassis receptacle. Use care to avoid damaging the fan harness or receptacle.
2. Connect the internal fan harness and install fan assembly into rear cavity of chassis as shown in the following figure. Use caution when installing the fan panel assembly to avoid pinching or damaging the wire harness.
3. Replace chassis feet.
4. Using a Phillips screwdriver, tighten the six #6-32 mounting screws and #8-32 ground screw into the rear of the chassis. To meet Shock and Vibration specifications listed in the *PXIe-1092 Specifications*, tighten screws to 1.3 N · m (11.5 in · lb) of torque.

Figure 22. Replacing Rear Fan Module

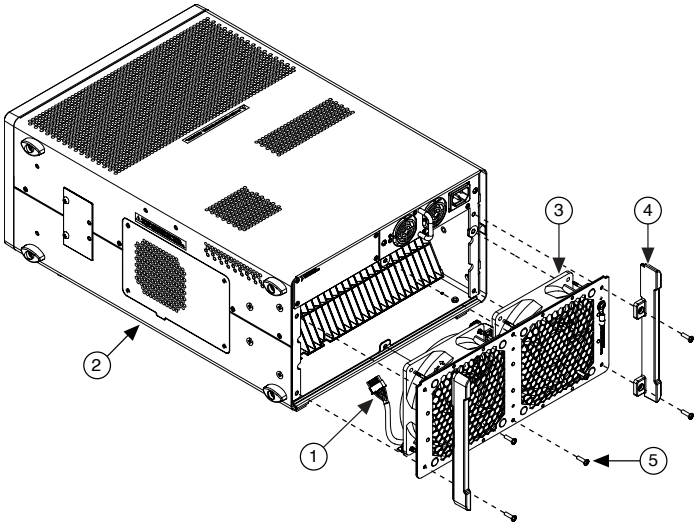

1. Fan Harness Plug
2. PXI Express Chassis
3. PXI Module Fan Assembly
4. Rear Chassis Feet (2x)
5. Mounting Screws (6x)

Figure 23. Internal Fan Harness

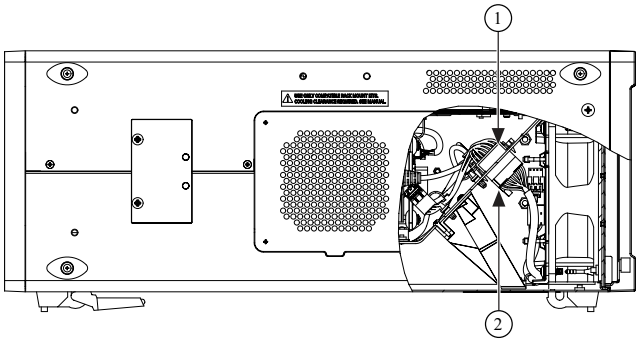

1. Fan Receptacle
2. Fan Harness Plug

Replacing the Side Fan Assembly

Before attempting to replace the side fan assembly, verify that there is adequate clearance to the side of the chassis. Disconnect the power cable from the power supply on the back of the chassis. Wait at least 30 seconds for the power supply's internal power to dissipate.

Removing the Side Fan Assembly

Complete the following steps to remove the side fan assembly:

1. Using a Phillips screwdriver, remove the four mounting screws that attach the side fan cover.
2. Remove side fan cover from the chassis.
3. Using a Phillips screwdriver, remove the two mounting screws that hold the side fan assembly onto the chassis.
4. Locate side fan assembly harness in internal chassis cavity and disconnect the fan from the chassis receptacle. Use caution when removing the fan assembly to avoid damaging the internal wire harness.
5. Pull side fan assembly straight from chassis and remove.

Installing the Side Fan Assembly

Complete the following steps to install a new side fan assembly

1. Plug side fan assembly plug into internal chassis fan receptacle.
2. Set side fan assembly into chassis side fan cavity. Use caution when placing wire harness into chassis to avoid damaging the internal or fan wire harness.
3. Using a Phillips screwdriver, hand tighten two side assembly mounting screws. Use the side fan cutout to pull clear extra cable from chassis side panels to prevent pinching.
4. Place all extra cable into chassis side fan cavity.
5. Using a Phillips screwdriver, tighten the four side fan cover mounting screws to the chassis. To meet Shock and Vibration specifications listed in the *PXIe-1092 Specifications*, tighten the two fan bracket mounting screws to 0.56 N · m (5.0 in · lb) and the four fan cover mounting screws to 0.80 N · m (6.7 in · lb) of torque.

Figure 24. Replacing Side Fan Assembly

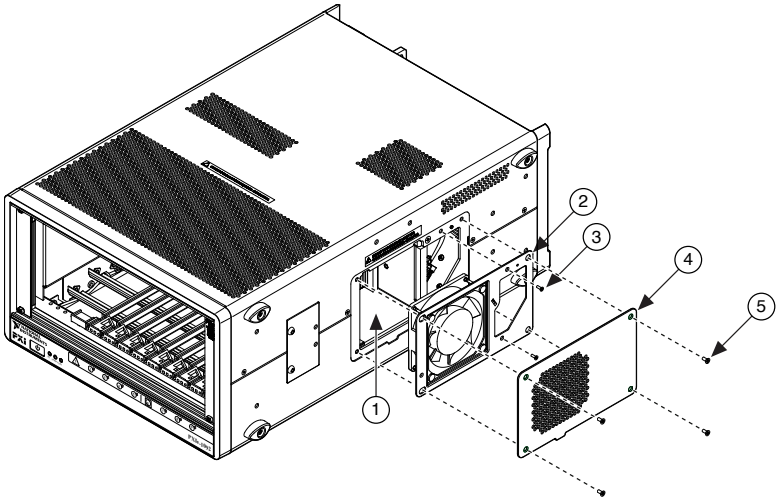

1. Chassis Side Fan Cavity
2. Side Fan Assembly
3. Side Fan Bracket Mounting Screws (2x)
4. Side Fan Cover
5. Side Fan Cover Mounting Screws (4x)

Calibration

The following section applies to PXIe-1092 chassis with the Timing and Synchronization upgrade.

The PXIe-1092 chassis is factory calibrated before shipment at approximately 25 °C to the levels indicated in the *PXIe-1092 Specifications*. The associated calibration constant is stored in the onboard nonvolatile memory.

The factory calibration of the PXIe-1092 involves calculating and storing one calibration constant that sets the OCXO frequency. The OCXO that the PXIe-1092 uses features electronic frequency control. This allows fine-tuning the OCXO by varying the control voltage to the OCXO. The chassis uses a 16-bit digital-to-analog converter (DAC) to give precise control of the tuning voltage. A single calibration constant sets the DAC value. This constant is adjusted during factory calibration to meet the specification listed in the *PXIe-1092 Specifications*.

Refer to `ni.com/calibration` for additional information about NI calibration services.

Related Documentation

The following documents contain information that you might find helpful as you read this manual:

- IEEE 1101.1-1991, *IEEE Standard for Mechanical Core Specifications for Microcomputers Using IEC 603-2 Connectors*
- IEEE 1101.10, I*EEE Standard for Additional Mechanical Specifications for Microcomputers Using IEEE 1101.1 Equipment Practice*
- *PICMG EXP.0 R1.0 CompactPCI Express Specification*, PCI Industrial Computers Manufacturers Group
- *PCI Express Base Specification*, Revision 2.0, PCI Special Interest Group
- *PXI-5 PXI Express Hardware Specification*, Revision 2.0, PXI Systems Alliance

© 2026 National Instruments Corporation.