USRP-2900 Features

2026-11-11

Contents

USRP-2900 Block Diagram 3

USRP-2900 Block Diagram

Signals received by the USRP-2900 are amplified, downconverted, filtered, digitized, and decimated before being passed to the host computer. Signals transmitted by the USRP-2900 are upsampled, reconstructed, filtered, upconverted, and amplified before being transmitted.

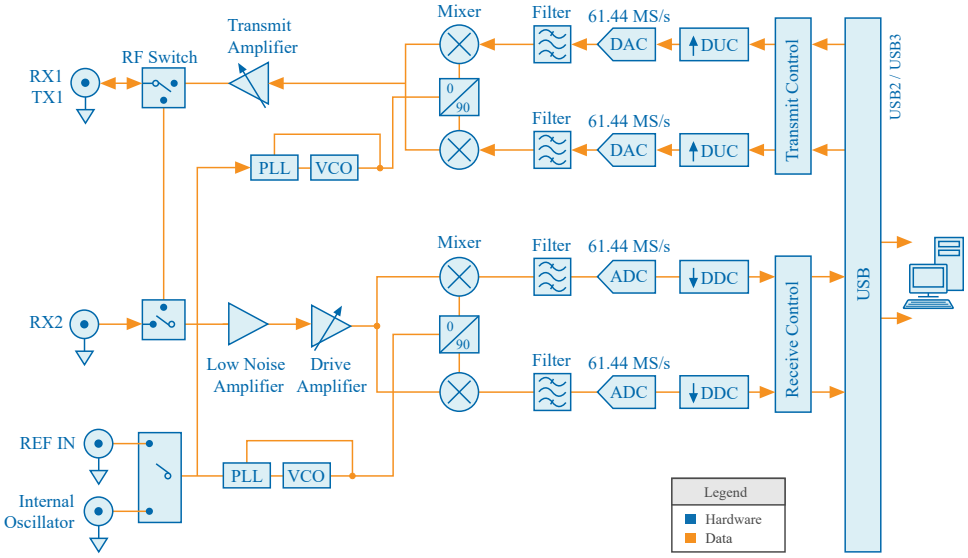

Note The RF switch allows transmit and receive operations to occur on the same shared antenna. On this device, one antenna is designated receive-only.

The following lists describe the individual blocks:

Receive Path:

- The low-noise amplifier and drive amplifier amplify the incoming signal.
- The phase-locked loop (PLL) controls the voltage-controlled oscillator (VCO) so that the device clocks and local oscillator (LO) can be frequency-locked to a reference signal.
- The mixer downconverts the signals to the baseband in-phase (I) and quadrature-

phase (Q) components.
- The bandpass filter reduces noise and high frequency components in the signal.
- The analog-to-digital converter (ADC) digitizes the I and Q data.
- The digital downconverter (DDC) mixes, filters, and decimates the signal to a user-specified rate.
- The downconverted samples are passed to the host computer over a USB 3.0 or USB 2.0 connection.

Transmit Path:

- The host computer synthesizes baseband I/Q signals and transmits the signals to the device over a USB 3.0 or USB 2.0 connection.
- The digital upconverter (DUC) mixes, filters, and interpolates the signal to 61.44 MS/s.
- The digital-to-analog converter (DAC) converts the signal to analog.
- The bandpass filter reduces noise and high frequency components in the signal.
- The mixer upconverts the signals to a user-specified RF frequency.
- The PLL controls the VCO so that the device clocks and LO can be frequency-locked to a reference signal.
- The transmit amplifier amplifies the signal and transmits the signal through the antenna.

© 2026 National Instruments Corporation.