USRP-2974 Features

2026-11-11

Contents

USRP-2974 Block Diagram 3

USRP-2974 Block Diagram

Signals received by the USRP-2974 are amplified, downconverted, filtered, digitized, and decimated before being passed to the controller. Signals transmitted by the USRP-2974 are upsampled, reconstructed, filtered, upconverted, and amplified before being transmitted.

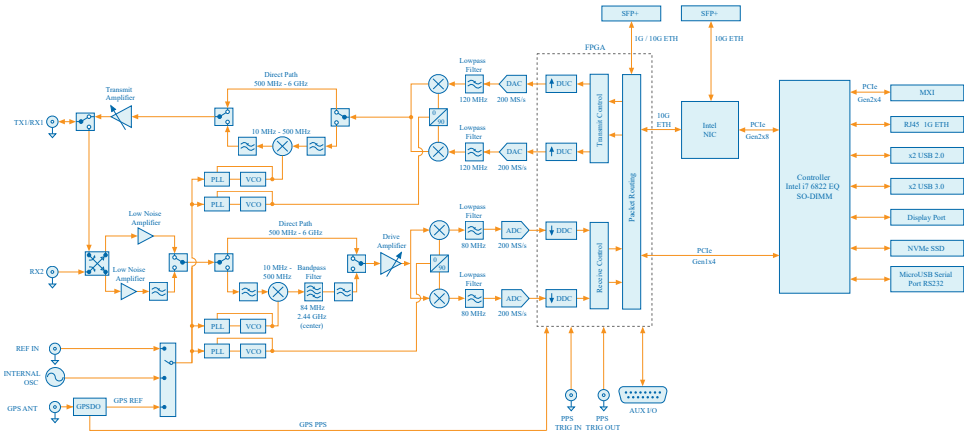

Identifying USRP-2974 Module Revision

To determine which module revision you have of the USRP-2974, refer to the label on the side of your module. The part number is printed on the label. The letter in the part number identifies the revision of the module. For example, part number 146873A-01L identifies a USRP-2974revision A module.

© 2026 National Instruments Corporation.