R&S®ZNA
VECTOR NETWORK ANALYZER

Specifications



Specifications
Version 24.00

ROHDE&SCHWARZ
Make ideas real

CONTENTS

Key performance 4
Definitions 6
Measurement range 7
Dynamic range 8
Measurement speed 10
Measurement accuracy of the R&S®ZNA26 12
Measurement accuracy of the R&S®ZNA43, 2.4 mm interface 13
Measurement accuracy of the R&S®ZNA43, 2.92 mm interface 14
Measurement accuracy of the R&S®ZNA50 15
Measurement accuracy of the R&S®ZNA67 16
Reflection measurement accuracy of the R&S®ZNA26 and R&S®ZNA43 18
Transmission measurement accuracy of the R&S®ZNA26 and R&S®ZNA43 18
Reflection measurement accuracy of the R&S®ZNA50 and R&S®ZNA67 19
Transmission measurement accuracy of the R&S®ZNA50 and R&S®ZNA67 19
Effective system data 20
Uncorrected system data 22
Test port output 24
Test port input 27
Display 29
Internal PC 29
Front panel connectors 29
Rear panel connectors 29
Options 30
R&S®ZNA-B7 memory extension for data streaming 30
R&S®ZNA-B8 mmWave converter LO 30
R&S®ZNA-B15 RFFE GPIO interface 31
R&S®ZNA-B26 direct IF access 32
R&S®ZNA-B91 trigger and control I/O board 32
R&S®ZNA26-B16, R&S®ZNA43-B16, R&S®ZNA50-B16 and R&S®ZNA67-B16 direct source and receiver access 33
R&S®ZNA26-B21/-B22/-B23/-B24, R&S®ZNA43-B21/-B22/-B23/-B24, R&S®ZNA50-B21/-B22/-B23/-B24 and R&S®ZNA67-B21/-B22/-B23/-B24 source step attenuators 34
R&S®ZNA26-B31/-B32/-B33/-B34, R&S®ZNA43-B31/-B32/-B33/-B34, R&S®ZNA50-B31/-B32/-B33/-B34 and R&S®ZNA67-B31/-B32/-B33/-B34 receiver step attenuators 34
R&S®ZNA26-B41/-B42/-B43/-B44, R&S®ZNA43-B41/-B42/-B43/-B44, R&S®ZNA50-B41/-B42/-B43/-B44 and R&S®ZNA67-B41/-B42/-B43/-B44 internal pulse modulators 35
R&S®ZNA26-B161, R&S®ZNA43-B161, R&S®ZNA50-B161, R&S®ZNA67-B161 source monitor access port 1 and R&S®ZNA26-B163, R&S®ZNA43-B163, R&S®ZNA50-B163, R&S®ZNA67-B163 source monitor access port 1 and port 3 35
R&S®ZNA26-B212, R&S®ZNA43-B212, R&S®ZNA50-B212, R&S®ZNA67-B212 internal combiner, port 1 and port 2 36
R&S®ZNA26-B213, R&S®ZNA43-B213, R&S®ZNA50-B213, R&S®ZNA67-B213 internal combiner, port 1 and port 3 38
R&S®ZNA26-B302, R&S®ZNA43-B302, R&S®ZNA50-B302, R&S®ZNA67-B302, R&S®ZNA50-B312, R&S®ZNA67-B312 low-noise amplifier, port 2 40

R&S®ZNA26-B501, R&S®ZNA43-B501, R&S®ZNA50-B501, R&S®ZNA67-B501, R&S®ZNA50-B511, R&S®ZNA67-B511 low power spurious reduction, port 1 ... 43
R&S®ZNA-K1 spectrum analyzer mode (based on fast Fourier transform) ... 45
R&S®ZNA-K5 vector corrected converter measurements ... 45
R&S®ZNA-K6 phase-coherent source control ... 45
R&S®ZNA-K7 measurements on pulsed signals ... 45
R&S®ZNA-K8 mmWave converter support ... 46
R&S®ZNA-K9 group delay measurements ... 46
R&S®ZNA-K30 noise figure measurement ... 46
R&S®ZNA-K980 health and utilization monitoring service (HUMS) ... 47
General data ... 48
Dimensions (in mm) ... 49
Ordering information ... 51
Warranty and service ... 58

Key performance

Dynamic range	> 129 dB (specification, without options), 147 dB (typ., with options), up to 170 dB (maximum attainable range, allowing full 2-port correction)
Sensitivity	> –120 dBm (1 Hz IF bandwidth) (spec., without options), –162 dBm (1 Hz IF bandwidth) (meas., with options) [1]
Power sweep range	100 dB (typ.) continuous electronic sweep range, can be shifted using mechanical step attenuators
Source power linearity	0.2 dB (typ., from –40 dBm to +10 dBm)
Receiver compression	0.05 dB (typ., up to +8 dBm with reference to –10 dBm, at test port)
Trace noise	0.005 dB (spec., RMS), 0.002 dB (typ., RMS) (10 GHz, 100 kHz measurement bandwidth, 0 dB reflection)
Speed	10 MHz to 43.5 GHz, 500 kHz measurement bandwidth, 1601 points, 2-port calibration, sweep time: 96 ms (nom.)

Four port instruments offering full flexibility [2]

Up to 4 sources (independently configurable, phase coherent, phase controlled), 5th source, e.g. for LO supply	allows complex measurement setups without external equipment on mixers and frequency convertors such as IM, group delay and deviation from linear phase; mixer and frequency convertor measurements up to the terahertz range, phased array antenna testing, active load pull on fundamental and harmonic frequencies, etc.
Optional rear panel LO out	mmWave converter setups with up to 4 converters without external signal generator; high-power (typ. +25 dBm) LO signal up to 26.5 GHz for mixer measurements as a 5th source
Optional second LO source	mixer and frequency convertor measurements with doubled speed and optimized trace noise, e.g. for mixer group delay and deviation from linear phase (K9 option) using 1 kHz measurement bandwidth; group delay trace noise peak-to-peak: 200 ps reduced to 15 ps
2 true receivers per port, resulting in 8 true receivers for 4-port model (no multiplexing)	true parallel and coherent data acquisition, e.g. for antenna array tests and antenna test systems, starting from 100 kHz; infinite data point capture (K28 option) with circular buffer and continuous data transfer over LAN or USB
Up to 4 pulse modulators, up to 8 pulse generators, enhanced trigger/sync/ctrl/ I/O	versatile pulse generation and visualization in timing diagram combined with enhanced triggering capabilities; timing control of external devices, e.g. pulse modulators, power supply, oscilloscopes or DUT, minimum pulse width: 40 ns
Optional direct IF access (in/out)	IF input for mmWave converter and antenna measurement systems, 1 GHz bandwidth available, IF output up to 2 GHz bandwidth for external pulse analysis
Selectable reference signal access (1 GHz external reference)	synchronization of external equipment (e.g. signal generators), resulting in improved performance for mmWave converters up to terahertz frequencies
Optional internal combiner, internal low noise amplifier (LNA), source monitor, direct receiver access, source attenuators, receiver attenuators, reverse coupler operation	various test set options for complex measurement setups
Optional external R&S®ZN-ZCG comb generator	allows vector corrected mixer measurements with calibrated conversion phase or vector corrected harmonic measurements of 2-port models including time domain transformation of wave quantities

[1] Measured at 1 kHz measurement bandwidth, normalized to 1 Hz.

[2] Respective options required.

Two port instruments tailored for specific applications [2]

Up to 2 sources (independently configurable, phase coherent, phase controlled), 3rd source, e.g. for LO supply	allows complex measurement setups without external equipment on mixers and frequency convertors such as IM, group delay and deviation from linear phase; mixer and frequency convertor measurements up to the terahertz range, phased array antenna testing, active load pull on fundamental and harmonic frequencies, etc.
Optional rear panel LO out	mmWave converter setups with up to 2 converters without external signal generator; high-power (typ. +25 dBm) LO signal up to 26.5 GHz for mixer measurements as a 3rd source
Optional second LO source	mixer and frequency convertor measurements with doubled speed and optimized trace noise, e.g. for mixer group delay and deviation from linear phase (K9 option) using 1 kHz measurement bandwidth; group delay trace noise peak-to-peak: 200 ps reduced to 15 ps
2 true receivers per port, resulting in 4 true receivers for 2-port model (no multiplexing)	true parallel and coherent data acquisition, e.g. for antenna array tests and antenna test systems, starting from 100 kHz; infinite data point capture (K28 option) with circular buffer and continuous data transfer over LAN or USB
Up to 2 pulse modulators, up to 4 pulse generators, enhanced trigger/sync/ctrl/ I/O	versatile pulse generation and visualization in timing diagram combined with enhanced triggering capabilities; timing control of external devices, e.g. pulse modulators, power supply, oscilloscopes or DUT, minimum pulse width: 40 ns
Optional direct IF access (in/out)	IF input for mmWave converter and antenna measurement systems, 1 GHz bandwidth available, IF output up to 2 GHz bandwidth for external pulse analysis
Selectable reference signal access (1 GHz external reference)	synchronization of external equipment (e.g. signal generators), resulting in improved performance for mmWave converters up to terahertz frequencies
Optional internal combiner, internal LNA, source monitor, direct receiver access, source attenuators, receiver attenuators, reverse coupler operation	various test set options for complex measurement setups
Optional external R&S®ZN-ZCG comb generator	allows vector corrected mixer measurements with calibrated conversion phase or vector corrected harmonic measurements of 2-port models including time domain transformation of wave quantities

Software options for comprehensive device characterization

- Mixer phase measurements using reciprocal calibration mixers or R&S®ZN-ZCG comb generator as phase reference
- Noise figure measurements on mixers and amplifiers up to 67 GHz: user guidance offering straight forward DUT setups
- Arbitrarily configurable sources and receivers, e.g. for frequency converting measurements, full flexibility
- Embedded LO converter (group delay and deviation from linear phase) characterization, including AM/AM and AM/PM conversion; intermodulation, source and load match correction, real-time LO tracking
- Phase-coherent stimulation and measurement with up to 4 sources; excellent phase accuracy of 0.1° at 10 GHz (meas.); supports arbitrary phase and amplitude control, e.g. create arbitrary phase fronts, balanced drive, quadrature drive
- True-differential measurements with full set of analysis capabilities, e.g. compression point, THD for amplifiers and I/Q mixers
- Spectrum analysis projected to calibration plane, noise level down to –162 dBm (1 Hz IF bandwidth, meas.) with optional low noise amplifier and reverse coupler operation; parallel sweeping of up to four receivers in spectrum sweep mode
- Wideband noise power ratio measurements based on trace statistics using an external signal generator
- Time domain measurements with increased time resolution for narrowband DUTs by resolution enhancement factor functionality
- Deembedding functions per the IEEE P370 standard, plus enhanced algorithms from industry-leading third parties for fixture characterization
- Real-time measurement uncertainty utilizing the traceability chain of METAS VNA Tools, integrated verification testing with traceability to various National Metrology Institutes

Definitions

General
Product data applies under the following conditions:

- Three hours of storage at ambient temperature followed by 90 minutes of warm-up operation
- Specified environmental conditions met
- Recommended calibration interval adhered to
- All internal automatic adjustments performed, if applicable

Specifications with limits
Represent warranted product performance by means of a range of values for the specified parameter. These specifications are marked with limiting symbols such as <, ≤, >, ≥, ±, or descriptions such as maximum, limit of, minimum. Compliance is ensured by testing or is derived from the design. Test limits are narrowed by guard bands to take into account measurement uncertainties, drift and aging, if applicable.

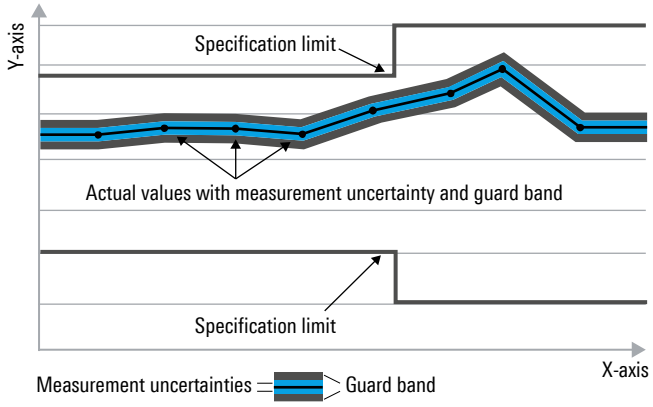

Non-traceable specifications with limits (n. trc.)
Represent product performance that is specified and tested as described under “Specifications with limits” above. However, product performance in this case cannot be warranted due to the lack of measuring equipment traceable to national metrology standards. In this case, measurements are referenced to standards used in the Rohde & Schwarz laboratories.

Specifications without limits
Represent warranted product performance for the specified parameter. These specifications are not specially marked and represent values with no or negligible deviations from the given value (e.g. dimensions or resolution of a setting parameter). Compliance is ensured by design.

Typical data (typ.)
Characterizes product performance by means of representative information for the given parameter. When marked with <, > or as a range, it represents the performance met by approximately 80 % of the instruments at production time. Otherwise, it represents the mean value.

Nominal values (nom.)
Characterize product performance by means of a representative value for the given parameter (e.g. nominal impedance). In contrast to typical data, a statistical evaluation does not take place and the parameter is not tested during production.

Measured values (meas.)
Characterize expected product performance by means of measurement results gained from individual samples.

Uncertainties
Represent limits of measurement uncertainty for a given measurand. Uncertainty is defined with a coverage factor of 2 and has been calculated in line with the rules of the Guide to the Expression of Uncertainty in Measurement (GUM), taking into account environmental conditions, aging, wear and tear.

Device settings and GUI parameters are designated with the format “parameter: value”.

Non-traceable specifications with limits, typical data as well as nominal and measured values are not warranted by Rohde & Schwarz.

In line with the 3GPP standard, chip rates are specified in million chips per second (Mcps), whereas bit rates and symbol rates are specified in billion bit per second (Gbps), million bit per second (Mbps), thousand bit per second (kbps), million symbols per second (Msps) or thousand symbols per second (ksps), and sample rates are specified in million samples per second (Msample/s). Gbps, Mcps, Mbps, Msps, kbps, ksps and Msample/s are not SI units.

Measurement range

Impedance		50 Ω
Test port connector	R&S®ZNA26	3.5 mm, male, ruggedized
	R&S®ZNA43, 2.4 mm interface	2.4 mm, male, ruggedized
	R&S®ZNA43, 2.92 mm interface	2.92 mm, male, ruggedized
	R&S®ZNA50	2.4 mm, male, ruggedized
	R&S®ZNA67	1.85 mm, male, ruggedized
Number of test ports	R&S®ZNA26, R&S®ZNA43, R&S®ZNA50 and R&S®ZNA67	2 or 4
Frequency range [3]	R&S®ZNA26	10 MHz to 26.5 GHz
	R&S®ZNA43	10 MHz to 43.5 GHz
	R&S®ZNA50	10 MHz to 50 GHz
	R&S®ZNA67	10 MHz to 67 GHz
DC block	R&S®ZNA26, R&S®ZNA43, R&S®ZNA50 and R&S®ZNA67	standard

Static frequency accuracy	The static frequency accuracy is determined with the formula *(time since last adjustment in years × aging per year) + temperature drift + achievable initial calibration accuracy* using the values specified below. Depending on whether or not the R&S®ZNA-B4 precision frequency reference option is installed, the standard or the improved value have to be taken into account.	
Aging per year	standard	$\pm 1 \times 10^{-6}$
	with R&S®ZNA-B4 precision frequency reference option	$\pm 1 \times 10^{-7}$
Temperature drift (+5 °C to +40 °C)	standard	$\pm 1 \times 10^{-6}$
	with R&S®ZNA-B4 precision frequency reference option	$\pm 1 \times 10^{-8}$
Achievable initial calibration accuracy	standard	$\pm 5 \times 10^{-7}$
	with R&S®ZNA-B4 precision frequency reference option	$\pm 5 \times 10^{-8}$

Frequency resolution		1 Hz
Number of measurement points	per trace	1 to 100001
Measurement bandwidth	1/1.5/2/3/5/7 steps	
	base unit	1 Hz to 1.5 MHz
	with R&S®ZNA-K17 increased IF bandwidth (30 MHz) option	1 Hz to 30 MHz
Analog frontend bandwidth	10 MHz to 5 GHz	50 MHz (nom.)
	5 GHz to 67 GHz	2 GHz (nom.)

[3] Specified and typical data given in this specifications document apply to the R&S®ZNA26, R&S®ZNA43, R&S®ZNA50 and R&S®ZNA67; note the respective frequency ranges.

Dynamic range

The receiver noise floor referred to in the following is defined as the RMS value of the data trace of the transmission magnitude, which is produced by noise and crosstalk with the test ports short-circuited. The specification applies at 10 Hz measurement bandwidth, without user correction applied. The dynamic range can be increased by using a measurement bandwidth of 1 Hz. Crosstalk does not limit the dynamic range. Dynamic range performance is specified between port 1 and port 2 as well as between port 3 and port 4 (4-port model). Otherwise, dynamic range performance is typical.

		Base unit			**Base unit + R&S®ZNA-B3n [4, 5]**		
		spec.	**typ.**	**meas.**	**spec.**	**typ.**	**meas.**
System dynamic range Difference between maximum output power and receiver noise floor (for data with additional step attenuator(s) or direct source and receiver access, refer to Options)	R&S®ZNA26, R&S®ZNA43, R&S®ZNA50 and R&S®ZNA67						
	10 MHz to 30 MHz	> 86 dB	96 dB		> 86 dB	96 dB	
	30 MHz to 100 MHz	> 103 dB	113 dB		> 103 dB	113 dB	
	100 MHz to 500 MHz	> 117 dB	127 dB		> 117 dB	127 dB	
	500 MHz to 1 GHz	> 126 dB	136 dB		> 131 dB	141 dB	
	1 GHz to 16 GHz	> 129 dB	139 dB		> 137 dB	147 dB	
	16 GHz to 20 GHz	> 127 dB	137 dB		> 135 dB	145 dB	
	20 GHz to 30 GHz	> 123 dB	133 dB		> 131 dB	141 dB	
	30 GHz to 40 GHz	> 117 dB	127 dB		> 124 dB	134 dB	
	R&S®ZNA43, 2.4 mm interface						
	40 GHz to 43.5 GHz	> 106 dB	116 dB		> 112 dB	122 dB	
	R&S®ZNA43, 2.92 mm interface						
	40 GHz to 43.5 GHz			116 dB			122 dB
	R&S®ZNA50 and R&S®ZNA67						
	40 GHz to 50 GHz	> 106 dB	116 dB		> 112 dB	122 dB	
	R&S®ZNA67						
	50 GHz to 67 GHz	> 102 dB	112 dB		> 107 dB	117 dB	

		Base unit + R&S®ZNAxx-B16 [6]			**Base unit + R&S®ZNAxx-B16 + R&S®ZNAxx-B2n + R&S®ZNAxx-B3n [4]**		
		spec.	**typ.**	**meas.**	**spec.**	**typ.**	**meas.**
System dynamic range Difference between maximum output power and receiver noise floor (for data with additional step attenuator(s) or direct source and receiver access, refer to Options)	R&S®ZNA26, R&S®ZNA43, R&S®ZNA50 and R&S®ZNA67						
	10 MHz to 30 MHz	> 86 dB	96 dB		> 85 dB	95 dB	
	30 MHz to 100 MHz	> 103 dB	113 dB		> 102 dB	112 dB	
	100 MHz to 500 MHz	> 117 dB	127 dB		> 116 dB	126 dB	
	500 MHz to 1 GHz	> 126 dB	136 dB		> 130 dB	140 dB	
	1 GHz to 16 GHz	> 127 dB	137 dB		> 134 dB	144 dB	
	16 GHz to 20 GHz	> 125 dB	135 dB		> 131 dB	141 dB	
	20 GHz to 30 GHz	> 121 dB	131 dB		> 127 dB	137 dB	
	30 GHz to 40 GHz	> 115 dB	125 dB		> 119 dB	129 dB	
	R&S®ZNA43, 2.4 mm interface						
	40 GHz to 43.5 GHz	> 103 dB	113 dB		> 105 dB	115 dB	
	R&S®ZNA43, 2.92 mm interface						
	40 GHz to 43.5 GHz			113 dB			115 dB
	R&S®ZNA50 and R&S®ZNA67						
	40 GHz to 50 GHz	> 103 dB	113 dB		> 105 dB	115 dB	
	R&S®ZNA67						
	50 GHz to 67 GHz	> 98 dB	108 dB		> 98 dB	108 dB	

[4] Receiver step attenuator in 0 dB position.

[5] n designates the port number (1/2/3/4).

[6] xx designates the R&S®ZNA model (R&S®ZNA26/R&S®ZNA43/R&S®ZNA50/R&S®ZNA67).

		Base unit + R&S®ZNAxx-B16	Base unit + R&S®ZNAxx-B16 + R&S®ZNAxx-B2n + R&S®ZNAxx-B3n [7]
		meas.	meas.
Extended dynamic range at direct source and receiver access input Difference between maximum output power and receiver noise floor using the direct receiver access	R&S®ZNA26, R&S®ZNA43		
	10 MHz to 30 MHz	130 dB	119 dB
	30 MHz to 100 MHz	136 dB	125 dB
	100 MHz to 500 MHz	136 dB	125 dB
	500 MHz to 1 GHz	145 dB	139 dB
	1 GHz to 16 GHz	147 dB	144 dB
	16 GHz to 20 GHz	145 dB	141 dB
	20 GHz to 30 GHz	141 dB	137 dB
	30 GHz to 40 GHz	135 dB	129 dB
	R&S®ZNA43		
	40 GHz to 43.5 GHz	124 dB	116 dB
	R&S®ZNA50 and R&S®ZNA67		
	40 GHz to 50 GHz	124 dB	116 dB
	R&S®ZNA67		
	50 GHz to 67 GHz	120 dB	110 dB

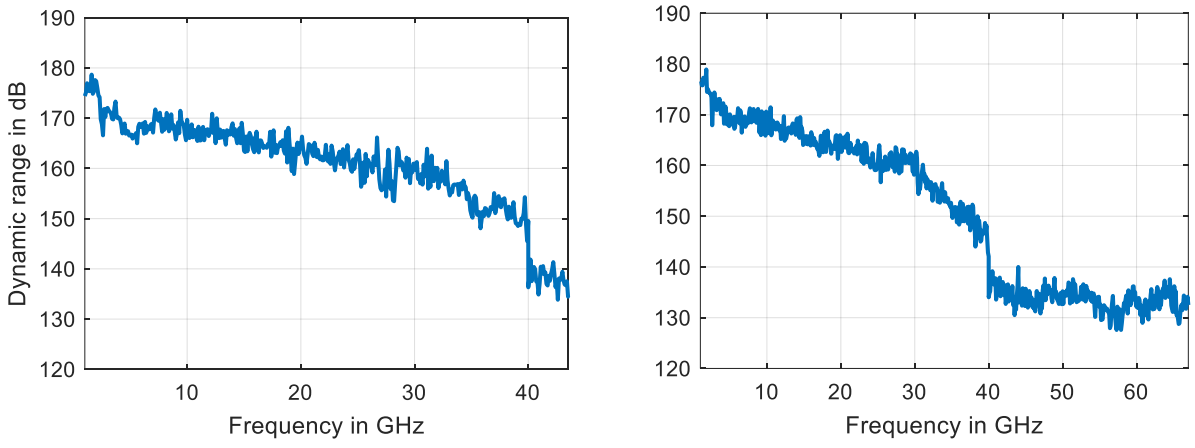

Exemplary measured dynamic range for R&S®ZNA43 (left) and R&S®ZNA67 (right) in reversed coupler configuration (-B16) at maximum output power, receiver step attenuator set to 0 dB at 1 Hz resolution bandwidth

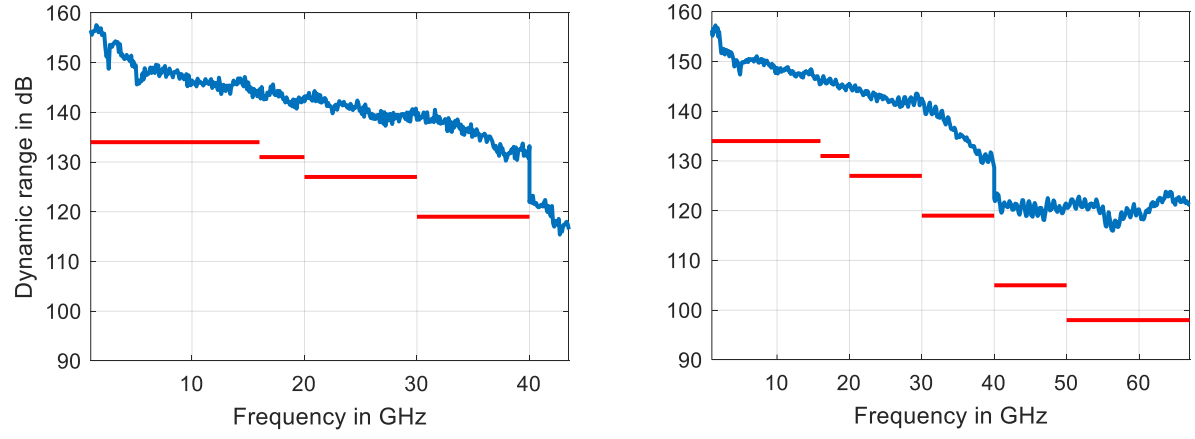

Typical dynamic range in dB versus frequency for R&S®ZNA43 (left) and R&S®ZNA67 (right) [8]

[7] Receiver step attenuator in 0 dB position.

[8] With R&S®ZNAxx-B16, R&S®ZNAxx-B2n and R&S®ZNAxx-B3n options.

Measurement speed

Measured with firmware version 3.20 and Windows 11 (64 bit).

Measurement time		
Acquisition time per point (T_{ACQ})	1 MHz measurement bandwidth, IF filter (analog) wideband	1 µs
	30 MHz measurement bandwidth	32 ns
Linear frequency sweep with 201 measurement points, 10 GHz center frequency, 200 MHz span		
Time per sweep (T_{SWEEP})	1 MHz measurement bandwidth, IF filter (analog) normal	< 3.9 ms
Sweep cycle time (T_{CYCLE})	1 MHz measurement bandwidth, IF filter (analog) normal	< 4.9 ms
CW mode, first point excluded		
Time per sweep point (T_{POINT})	1 MHz measurement bandwidth, IF filter (analog) normal	3.7 µs
	1 MHz measurement bandwidth, IF filter (analog) wideband	2.3 µs
	2 MHz measurement bandwidth, IF filter (analog) wideband	1.7 µs

		IEC/IEEE	VXI11 over 1 Gbit/s LAN
Time for measurement and data transfer (typ.)	for 201 measurements points, 800 MHz start frequency, 1 GHz stop frequency, 1 MHz measurement bandwidth [9]	14 ms	13 ms
Data transfer time (typ.)	for 201 measurements points (magnitude)	1.7 ms	0.9 ms

Switching time between channels	with a maximum of 2001 points	< 2 ms

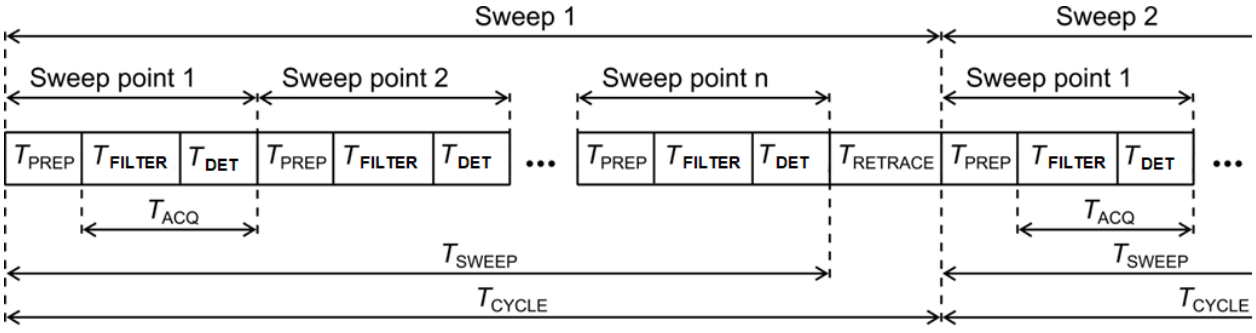

Measurement sequence

T_{PREP} Preparation time required to set up the internal hardware components
T_{FILTER} Filter settling time (settling time of the digital filters)
T_{DET} Detector time (additional time for averaging of detector sample, normally 0)
T_{ACQ} Data acquisition time ($T_{ACQ} = T_{FILTER} + T_{DET}$)
T_{POINT} Total time for one sweep point
T_{SWEEP} Time required for one sweep
$T_{RETRACE}$ Time between two sweeps
T_{CYCLE} Sweep cycle time ($T_{CYCLE} = T_{SWEEP} + T_{RETRACE}$)

[9] In continuous mode, no additional time for data transfer is needed, as data transfer takes place simultaneously with the measurement.

Nominal sweep cycle times in ms versus number of measurement points [10]					
Number of measurement points	**51**	**201**	**401**	**1601**	**5001**
R&S®ZNA26, R&S®ZNA43, R&S®ZNA50 and R&S®ZNA67					
9.0 GHz start frequency, 10.0 GHz stop frequency, 500.0 kHz measurement bandwidth					
With correction switched off	2.6	5.5	9.5	15	28
With 2-port TOSM calibration	4.6	10	18	28	55
With 4-port TOSM calibration	8.0	20	35	55	110
9.0 GHz start frequency, 10.0 GHz stop frequency, 100.0 kHz measurement bandwidth					
With correction switched off	4.1	8.2	13	27	64
With 2-port TOSM calibration	7.0	15	25	52	126
With 4-port TOSM calibration	13	29	49	103	251
9.0 GHz start frequency, 10.0 GHz stop frequency, 1.0 kHz measurement bandwidth					
With correction switched off	58	220	437	1724	5355
With 2-port TOSM calibration	115	440	873	3447	10712
With 4-port TOSM calibration	228	878	1744	6894	21421
R&S®ZNA26					
10.0 MHz start frequency, 26.5 GHz stop frequency, 500.0 kHz measurement bandwidth					
With correction switched off	9.0	15	20	44	108
With 2-port TOSM calibration	17	29	39	86	215
With 4-port TOSM calibration	34	57	77	173	432
10.0 MHz start frequency, 26.5 GHz stop frequency, 100.0 kHz measurement bandwidth					
With correction switched off	17	26	33	66	157
With 2-port TOSM calibration	32	51	65	131	312
With 4-port TOSM calibration	62	100	128	260	622
10.0 MHz start frequency, 26.5 GHz stop frequency, 1.0 kHz measurement bandwidth					
With correction switched off	71	239	457	1758	5441
With 2-port TOSM calibration	140	476	912	3514	10885
With 4-port TOSM calibration	278	950	1822	7026	21766
R&S®ZNA43					
10.0 MHz start frequency, 43.5 GHz stop frequency, 500.0 kHz measurement bandwidth					
With correction switched off	11	18	24	48	113
With 2-port TOSM calibration	21	36	47	95	227
With 4-port TOSM calibration	41	71	92	189	452
10.0 MHz start frequency, 43.5 GHz stop frequency, 100.0 kHz measurement bandwidth					
With correction switched off	20	31	39	72	163
With 2-port TOSM calibration	38	60	76	143	324
With 4-port TOSM calibration	74	118	150	284	646
10.0 MHz start frequency, 43.5 GHz stop frequency, 1.0 kHz measurement bandwidth					
With correction switched off	74	243	463	1764	5447
With 2-port TOSM calibration	146	484	923	3527	10897
With 4-port TOSM calibration	290	967	1845	7050	21790
R&S®ZNA67					
10.0 MHz start frequency, 67.0 GHz stop frequency, 500.0 kHz measurement bandwidth					
With correction switched off	12	22	28	54	119
With 2-port TOSM calibration	24	44	56	107	237
With 4-port TOSM calibration	48	88	111	213	473
10.0 MHz start frequency, 67.0 GHz stop frequency, 100.0 kHz measurement bandwidth					
With correction switched off	22	36	44	81	170
With 2-port TOSM calibration	43	69	86	160	340
With 4-port TOSM calibration	83	137	171	318	678
10.0 MHz start frequency, 67.0 GHz stop frequency, 1.0 kHz measurement bandwidth					
With correction switched off	76	248	468	1772	5455
With 2-port TOSM calibration	150	494	934	3543	10911
With 4-port TOSM calibration	299	987	1866	7085	21822

[10] Sweep time is understood to be the sweep cycle time; static frequency accuracy of the instrument applies; measured with firmware version 3.10, Windows 11 (64 bit).

Measurement accuracy of the R&S®ZNA26

The data below is valid between +18 °C and +28 °C, provided the temperature has not varied by more than 1 °C after calibration. Validity of the data is conditional on using an R&S®ZN-Z235 calibration kit in order to achieve the effective system data specified below. Frequency points, measurement bandwidth and sweep time have to be identical for measurement and calibration (no interpolation of the calibration). Specifications are based on a matched DUT for transmission measurements and on an isolated DUT for reflection measurements. In both cases, a measurement bandwidth of 10 Hz and a nominal source power of 0 dBm apply for the base unit without options.

Uncertainty of transmission measurements		**Magnitude**	**Phase**
10 MHz to 40 MHz	0 dB to –20 dB	0.04 dB	0.5°
	–20 dB to –30 dB	0.23 dB	1.0°
	–30 dB to –40 dB	0.60 dB	3.0°
	–40 dB to –50 dB	1.50 dB	5.0°
	–50 dB to –60 dB	4.50 dB	25.0°
> 40 MHz to 200 MHz	0 dB to –30 dB	0.04 dB	0.5°
	–30 dB to –40 dB	0.05 dB	0.6°
	–40 dB to –50 dB	0.15 dB	0.7°
	–50 dB to –60 dB	0.45 dB	3.0°
> 200 MHz to 10 GHz	0 dB to –30 dB	0.04 dB	0.7°
	–30 dB to –40 dB	0.05 dB	0.8°
	–40 dB to –50 dB	0.05 dB	0.8°
	–50 dB to –60 dB	0.09 dB	1.0°
> 10 GHz to 26.5 GHz	0 dB to –30 dB	0.05 dB	1.3°
	–30 dB to –40 dB	0.06 dB	1.4°
	–40 dB to –50 dB	0.06 dB	1.4°
	–50 dB to –60 dB	0.13 dB	1.5°

Uncertainty of reflection measurements	**Logarithmic**			**Linear**	
	Reflection level	**Magnitude**	**Phase**	**Reflection range**	**Magnitude**
10 MHz to 10 GHz	0 dB	0.10 dB	0.6°	0 dB to –3 dB	0.011
	–3 dB	0.10 dB	0.6°	–3 dB to –6 dB	0.008
	–6 dB	0.11 dB	0.7°	–6 dB to –15 dB	0.006
	–15 dB	0.25 dB	1.7°	–15 dB to –25 dB	0.005
	–25 dB	0.74 dB	5.1°	–25 dB to –35 dB	0.005
	–35 dB	2.16 dB	16.0°	–35 dB	0.005
> 10 GHz to 20 GHz	0 dB	0.13 dB	0.9°	0 dB to –3 dB	0.015
	–3 dB	0.13 dB	0.8°	–3 dB to –6 dB	0.010
	–6 dB	0.14 dB	0.9°	–6 dB to –15 dB	0.008
	–15 dB	0.31 dB	2.1°	–15 dB to –25 dB	0.007
	–25 dB	0.93 dB	6.5°	–25 dB to –35 dB	0.006
	–35 dB	2.64 dB	20.0°	–35 dB	0.006
> 20 GHz to 26.5 GHz	0 dB	0.14 dB	0.9°	0 dB to –3 dB	0.016
	–3 dB	0.14 dB	1.0°	–3 dB to –6 dB	0.012
	–6 dB	0.17 dB	1.1°	–6 dB to –15 dB	0.010
	–15 dB	0.39 dB	2.6°	–15 dB to –25 dB	0.008
	–25 dB	1.15 dB	8.1°	–25 dB to –35 dB	0.008
	–35 dB	3.21 dB	26.0°	–35 dB	0.008

Measurement accuracy of the R&S®ZNA43, 2.4 mm interface

The data below is valid between +18 °C and +28 °C, provided the temperature has not varied by more than 1 °C after calibration. Validity of the data is conditional on using an R&S®ZV-Z224 calibration kit with accredited calibration in order to achieve the effective system data specified below. Frequency points, measurement bandwidth and sweep time have to be identical for measurement and calibration (no interpolation of the calibration). Specifications are based on a matched DUT for transmission measurements and on an isolated DUT for reflection measurements. In both cases, a measurement bandwidth of 10 Hz and a nominal source power of 0 dBm apply for the base unit without options.

Uncertainty of transmission measurements		**Magnitude**	**Phase**
10 MHz to 40 MHz	0 dB to –20 dB	0.04 dB	0.5°
	–20 dB to –30 dB	0.23 dB	1.0°
	–30 dB to –40 dB	0.60 dB	3.0°
	–40 dB to –50 dB	1.50 dB	5.0°
	–50 dB to –60 dB	4.50 dB	25.0°
> 40 MHz to 200 MHz	0 dB to –30 dB	0.04 dB	0.5°
	–30 dB to –40 dB	0.05 dB	0.6°
	–40 dB to –50 dB	0.15 dB	0.7°
	–50 dB to –60 dB	0.45 dB	3.0°
> 200 MHz to 10 GHz	0 dB to –30 dB	0.04 dB	0.7°
	–30 dB to –40 dB	0.05 dB	0.8°
	–40 dB to –50 dB	0.05 dB	0.8°
	–50 dB to –60 dB	0.09 dB	1.0°
> 10 GHz to 20 GHz	0 dB to –30 dB	0.05 dB	1.3°
	–30 dB to –40 dB	0.06 dB	1.4°
	–40 dB to –50 dB	0.06 dB	1.4°
	–50 dB to –60 dB	0.13 dB	1.5°
> 20 GHz to 40 GHz	0 dB to –30 dB	0.06 dB	1.8°
	–30 dB to –40 dB	0.07 dB	2.0°
	–40 dB to –50 dB	0.07 dB	2.0°
	–50 dB to –60 dB	0.19 dB	2.0°
> 40 GHz to 43.5 GHz	0 dB to –30 dB	0.07 dB	2.0°
	–30 dB to –40 dB	0.08 dB	2.2°
	–40 dB to –50 dB	0.15 dB	2.2°
	–50 dB to –60 dB	0.47 dB	3.9°

Uncertainty of reflection measurements	**Logarithmic**			**Linear**	
	Reflection level	**Magnitude**	**Phase**	**Reflection range**	**Magnitude**
10 MHz to 10 GHz	0 dB	0.10 dB	0.6°	0 dB to –3 dB	0.011
	–3 dB	0.10 dB	0.6°	–3 dB to –6 dB	0.008
	–6 dB	0.11 dB	0.7°	–6 dB to –15 dB	0.006
	–15 dB	0.25 dB	1.7°	–15 dB to –25 dB	0.005
	–25 dB	0.74 dB	5.1°	–25 dB to –35 dB	0.005
	–35 dB	2.16 dB	16.0°	–35 dB	0.005
> 10 GHz to 20 GHz	0 dB	0.13 dB	0.9°	0 dB to –3 dB	0.015
	–3 dB	0.13 dB	0.8°	–3 dB to –6 dB	0.010
	–6 dB	0.14 dB	0.9°	–6 dB to –15 dB	0.008
	–15 dB	0.31 dB	2.1°	–15 dB to –25 dB	0.007
	–25 dB	0.93 dB	6.5°	–25 dB to –35 dB	0.006
	–35 dB	2.64 dB	20.0°	–35 dB	0.006
> 20 GHz to 40 GHz	0 dB	0.16 dB	1.2°	0 dB to –3 dB	0.019
	–3 dB	0.16 dB	1.2°	–3 dB to –6 dB	0.013
	–6 dB	0.17 dB	1.3°	–6 dB to –15 dB	0.010
	–15 dB	0.39 dB	2.6°	–15 dB to –25 dB	0.008
	–25 dB	1.15 dB	8.1°	–25 dB to –35 dB	0.008
	–35 dB	3.21 dB	26.0°	–35 dB	0.008
> 40 GHz to 43.5 GHz	0 dB	0.20 dB	1.6°	0 dB to –3 dB	0.024
	–3 dB	0.20 dB	1.6°	–3 dB to –6 dB	0.016
	–6 dB	0.22 dB	1.7°	–6 dB to –15 dB	0.013
	–15 dB	0.49 dB	3.3°	–15 dB to –25 dB	0.010
	–25 dB	1.43 dB	10.0°	–25 dB to –35 dB	0.010
	–35 dB	3.88 dB	32.0°	–35 dB	0.010

Measurement accuracy of the R&S®ZNA43, 2.92 mm interface

The data below is valid between +18 °C and +28 °C, provided the temperature has not varied by more than 1 °C after calibration. Validity of the data is conditional on using an R&S®ZN-Z229 calibration kit in order to achieve the effective system data specified below. Frequency points, measurement bandwidth and sweep time have to be identical for measurement and calibration (no interpolation of the calibration). Specifications are based on a matched DUT for transmission measurements and on an isolated DUT for reflection measurements. In both cases, a measurement bandwidth of 10 Hz and a nominal source power of 0 dBm apply for the base unit without options.

Uncertainty of transmission measurements		Magnitude	Phase
10 MHz to 40 MHz	0 dB to –20 dB	0.04 dB	0.5°
	–20 dB to –30 dB	0.23 dB	1.0°
	–30 dB to –40 dB	0.60 dB	3.0°
	–40 dB to –50 dB	1.50 dB	5.0°
	–50 dB to –60 dB	4.50 dB	25.0°
> 40 MHz to 200 MHz	0 dB to –30 dB	0.04 dB	0.5°
	–30 dB to –40 dB	0.05 dB	0.6°
	–40 dB to –50 dB	0.15 dB	0.7°
	–50 dB to –60 dB	0.45 dB	3.0°
> 200 MHz to 10 GHz	0 dB to –30 dB	0.04 dB	0.7°
	–30 dB to –40 dB	0.05 dB	0.8°
	–40 dB to –50 dB	0.05 dB	0.8°
	–50 dB to –60 dB	0.09 dB	1.0°
> 10 GHz to 26.5 GHz	0 dB to –30 dB	0.05 dB	1.3°
	–30 dB to –40 dB	0.06 dB	1.4°
	–40 dB to –50 dB	0.06 dB	1.4°
	–50 dB to –60 dB	0.13 dB	1.5°
> 26.5 GHz to 40 GHz	0 dB to –30 dB	0.06 dB	1.8°
	–30 dB to –40 dB	0.07 dB	2.0°
	–40 dB to –50 dB	0.07 dB	2.0°
	–50 dB to –60 dB	0.19 dB	2.0°
> 40 GHz to 43.5 GHz (meas.)	0 dB to –30 dB	0.07 dB	2.0°
	–30 dB to –40 dB	0.08 dB	2.2°
	–40 dB to –50 dB	0.15 dB	2.2°
	–50 dB to –60 dB	0.47 dB	3.9°

Uncertainty of reflection measurements	Logarithmic			Linear	
	Reflection level	Magnitude	Phase	Reflection range	Magnitude
10 MHz to 10 GHz	0 dB	0.11 dB	0.8°	0 dB to –3 dB	0.013
	–3 dB	0.11 dB	0.7°	–3 dB to –6 dB	0.009
	–6 dB	0.12 dB	0.8°	–6 dB to –15 dB	0.007
	–15 dB	0.28 dB	1.9°	–15 dB to –25 dB	0.006
	–25 dB	0.83 dB	5.7°	–25 dB to –35 dB	0.006
	–35 dB	2.39 dB	18.0°	–35 dB	0.006
> 10 GHz to 26.5 GHz	0 dB	0.14 dB	0.9°	0 dB to –3 dB	0.016
	–3 dB	0.14 dB	1.0°	–3 dB to –6 dB	0.012
	–6 dB	0.17 dB	1.1°	–6 dB to –15 dB	0.010
	–15 dB	0.39 dB	2.6°	–15 dB to –25 dB	0.008
	–25 dB	1.15 dB	8.1°	–25 dB to –35 dB	0.008
	–35 dB	3.21 dB	26.0°	–35 dB	0.008
> 26.5 GHz to 40 GHz	0 dB	0.22 dB	1.4°	0 dB to –3 dB	0.025
	–3 dB	0.22 dB	1.5°	–3 dB to –6 dB	0.018
	–6 dB	0.26 dB	1.7°	–6 dB to –15 dB	0.015
	–15 dB	0.61 dB	4.1°	–15 dB to –25 dB	0.013
	–25 dB	1.76 dB	13.0°	–25 dB to –35 dB	0.013
	–35 dB	4.65 dB	41.0°	–35 dB	0.013
> 40 GHz to 43.5 GHz (meas.)	0 dB	0.22 dB	1.5°	0 dB to –3 dB	0.026
	–3 dB	0.23 dB	1.5°	–3 dB to –6 dB	0.019
	–6 dB	0.26 dB	1.8°	–6 dB to –15 dB	0.015
	–15 dB	0.61 dB	4.2°	–15 dB to –25 dB	0.013
	–25 dB	1.76 dB	13.0°	–25 dB to –35 dB	0.013
	–35 dB	4.65 dB	41.0°	–35 dB	0.013

Measurement accuracy of the R&S®ZNA50

The data below is valid between +18 °C and +28 °C, provided the temperature has not varied by more than 1 °C after calibration. Validity of the data is conditional on using an R&S®ZN-Z224 calibration kit in order to achieve the effective system data specified below. Frequency points, measurement bandwidth and sweep time have to be identical for measurement and calibration (no interpolation of the calibration). Specifications are based on a matched DUT for transmission measurements and on an isolated DUT for reflection measurements. In both cases, a measurement bandwidth of 10 Hz and a nominal source power of 0 dBm apply for the base unit without options.

Uncertainty of transmission measurements		**Magnitude**	**Phase**
10 MHz to 40 MHz	0 dB to –20 dB	0.04 dB	0.5°
	–20 dB to –30 dB	0.23 dB	1.0°
	–30 dB to –40 dB	0.60 dB	3.0°
	–40 dB to –50 dB	1.50 dB	5.0°
	–50 dB to –60 dB	4.50 dB	25.0°
> 40 MHz to 200 MHz	0 dB to –30 dB	0.04 dB	0.5°
	–30 dB to –40 dB	0.05 dB	0.6°
	–40 dB to –50 dB	0.15 dB	0.7°
	–50 dB to –60 dB	0.45 dB	3.0°
> 200 MHz to 10 GHz	0 dB to –30 dB	0.04 dB	0.7°
	–30 dB to –40 dB	0.05 dB	0.8°
	–40 dB to –50 dB	0.05 dB	0.8°
	–50 dB to –60 dB	0.09 dB	1.0°
> 10 GHz to 26.5 GHz	0 dB to –30 dB	0.05 dB	1.3°
	–30 dB to –40 dB	0.06 dB	1.4°
	–40 dB to –50 dB	0.06 dB	1.4°
	–50 dB to –60 dB	0.13 dB	1.5°
> 26.5 GHz to 40 GHz	0 dB to –30 dB	0.06 dB	1.8°
	–30 dB to –40 dB	0.07 dB	2.0°
	–40 dB to –50 dB	0.07 dB	2.0°
	–50 dB to –60 dB	0.19 dB	2.0°
> 40 GHz to 50 GHz	0 dB to –30 dB	0.07 dB	2.0°
	–30 dB to –40 dB	0.08 dB	2.2°
	–40 dB to –50 dB	0.17 dB	2.2°
	–50 dB to –60 dB	0.47 dB	3.6°

Uncertainty of reflection measurements	**Logarithmic**			**Linear**	
	Reflection level	**Magnitude**	**Phase**	**Reflection range**	**Magnitude**
0.01 GHz to 10 GHz	0 dB	0.10 dB	0.6°	0 dB to –3 dB	0.011
	–3 dB	0.10 dB	0.6°	–3 dB to –6 dB	0.008
	–6 dB	0.11 dB	0.7°	–6 dB to –15 dB	0.006
	–15 dB	0.25 dB	1.7°	–15 dB to –25 dB	0.005
	–25 dB	0.74 dB	5.1°	–25 dB to –35 dB	0.005
	–35 dB	2.16 dB	16.0°	–35 dB	0.005
> 10 GHz to 20 GHz	0 dB	0.13 dB	0.9°	0 dB to –3 dB	0.015
	–3 dB	0.13 dB	0.8°	–3 dB to –6 dB	0.010
	–6 dB	0.14 dB	0.9°	–6 dB to –15 dB	0.008
	–15 dB	0.31 dB	2.1°	–15 dB to –25 dB	0.007
	–25 dB	0.93 dB	6.5°	–25 dB to –35 dB	0.006
	–35 dB	2.64 dB	20.0°	–35 dB	0.006
> 20 GHz to 40 GHz	0 dB	0.17 dB	1.2°	0 dB to –3 dB	0.019
	–3 dB	0.16 dB	1.2°	–3 dB to –6 dB	0.013
	–6 dB	0.18 dB	1.3°	–6 dB to –15 dB	0.011
	–15 dB	0.39 dB	2.7°	–15 dB to –25 dB	0.008
	–25 dB	1.15 dB	8.1°	–25 dB to –35 dB	0.008
	–35 dB	3.21 dB	26.0°	–35 dB	0.008
> 40 GHz to 50 GHz	0 dB	0.20 dB	1.6°	0 dB to –3 dB	0.024
	–3 dB	0.20 dB	1.6°	–3 dB to –6 dB	0.016
	–6 dB	0.22 dB	1.7°	–6 dB to –15 dB	0.013
	–15 dB	0.49 dB	3.3°	–15 dB to –25 dB	0.010
	–25 dB	1.43 dB	10.0°	–25 dB to –35 dB	0.010
	–35 dB	3.88 dB	32.0°	–35 dB	0.010

Measurement accuracy of the R&S®ZNA67

The data below is valid between +18 °C and +28 °C, provided the temperature has not varied by more than 1 °C after calibration. Validity of the data is conditional on using an R&S®ZN-Z218 calibration kit in order to achieve the effective system data specified below. Frequency points, measurement bandwidth and sweep time have to be identical for measurement and calibration (no interpolation of the calibration). Specifications are based on a matched DUT for transmission measurements and on an isolated DUT for reflection measurements. In both cases, a measurement bandwidth of 10 Hz and a nominal source power of 0 dBm apply for the base unit without options.

Uncertainty of transmission measurements		**Magnitude**	**Phase**
10 MHz to 40 MHz	0 dB to –20 dB	0.04 dB	0.5°
	–20 dB to –30 dB	0.23 dB	1.0°
	–30 dB to –40 dB	0.60 dB	3.0°
	–40 dB to –50 dB	1.50 dB	5.0°
	–50 dB to –60 dB	4.50 dB	25.0°
> 40 MHz to 200 MHz	0 dB to –30 dB	0.04 dB	0.5°
	–30 dB to –40 dB	0.05 dB	0.6°
	–40 dB to –50 dB	0.15 dB	0.7°
	–50 dB to –60 dB	0.45 dB	3.0°
> 200 MHz to 10 GHz	0 dB to –30 dB	0.04 dB	0.7°
	–30 dB to –40 dB	0.05 dB	0.8°
	–40 dB to –50 dB	0.05 dB	0.8°
	–50 dB to –60 dB	0.09 dB	1.0°
> 10 GHz to 26.5 GHz	0 dB to –30 dB	0.05 dB	1.3°
	–30 dB to –40 dB	0.06 dB	1.4°
	–40 dB to –50 dB	0.06 dB	1.4°
	–50 dB to –60 dB	0.13 dB	1.5°
> 26.5 GHz to 40 GHz	0 dB to –30 dB	0.06 dB	1.8°
	–30 dB to –40 dB	0.07 dB	2.0°
	–40 dB to –50 dB	0.07 dB	2.0°
	–50 dB to –60 dB	0.19 dB	2.0°
> 40 GHz to 50 GHz	0 dB to –30 dB	0.07 dB	2.0°
	–30 dB to –40 dB	0.08 dB	2.2°
	–40 dB to –50 dB	0.17 dB	2.2°
	–50 dB to –60 dB	0.47 dB	3.6°
> 50 GHz to 67 GHz	0 dB to –30 dB	0.07 dB	2.1°
	–30 dB to –40 dB	0.08 dB	2.3°
	–40 dB to –50 dB	0.18 dB	2.8°
	–50 dB to –60 dB	0.47 dB	4.3°

Uncertainty of reflection measurements	Logarithmic			Linear	
	Reflection level	Magnitude	Phase	Reflection range	Magnitude
0.01 GHz to 10 GHz	0 dB	0.10 dB	0.6°	0 dB to –3 dB	0.011
	–3 dB	0.10 dB	0.6°	–3 dB to –6 dB	0.008
	–6 dB	0.11 dB	0.7°	–6 dB to –15 dB	0.006
	–15 dB	0.25 dB	1.7°	–15 dB to –25 dB	0.005
	–25 dB	0.74 dB	5.1°	–25 dB to –35 dB	0.005
	–35 dB	2.16 dB	16.0°	–35 dB	0.005
> 10 GHz to 20 GHz	0 dB	0.13 dB	0.9°	0 dB to –3 dB	0.015
	–3 dB	0.13 dB	0.8°	–3 dB to –6 dB	0.010
	–6 dB	0.14 dB	0.9°	–6 dB to –15 dB	0.008
	–15 dB	0.31 dB	2.1°	–15 dB to –25 dB	0.007
	–25 dB	0.93 dB	6.5°	–25 dB to –35 dB	0.006
	–35 dB	2.64 dB	20.0°	–35 dB	0.006
> 20 GHz to 40 GHz	0 dB	0.16 dB	1.2°	0 dB to –3 dB	0.019
	–3 dB	0.16 dB	1.2°	–3 dB to –6 dB	0.013
	–6 dB	0.17 dB	1.3°	–6 dB to –15 dB	0.010
	–15 dB	0.39 dB	2.6°	–15 dB to –25 dB	0.008
	–25 dB	1.15 dB	8.1°	–25 dB to –35 dB	0.008
	–35 dB	3.21 dB	26.0°	–35 dB	0.008
> 40 GHz to 50 GHz	0 dB	0.20 dB	1.6°	0 dB to –3 dB	0.024
	–3 dB	0.20 dB	1.6°	–3 dB to –6 dB	0.016
	–6 dB	0.22 dB	1.7°	–6 dB to –15 dB	0.013
	–15 dB	0.49 dB	3.3°	–15 dB to –25 dB	0.010
	–25 dB	1.43 dB	10.0°	–25 dB to –35 dB	0.010
	–35 dB	3.88 dB	32.0°	–35 dB	0.010
> 50 GHz to 67 GHz	0 dB	0.26 dB	1.8°	0 dB to –3 dB	0.031
	–3 dB	0.26 dB	1.8°	–3 dB to –6 dB	0.022
	–6 dB	0.30 dB	2.0°	–6 dB to –15 dB	0.018
	–15 dB	0.68 dB	4.7°	–15 dB to –25 dB	0.015
	–25 dB	1.95 dB	14.0°	–25 dB to –35 dB	0.014
	–35 dB	5.08 dB	46.0°	–35 dB	0.014

Reflection measurement accuracy of the R&S®ZNA26 and R&S®ZNA43

The diagrams below show the typical uncertainty of the reflection magnitude and reflection phase measurements for the R&S®ZNA26 in the frequency range from 10 MHz to 26.5 GHz and for the R&S®ZNA43 in the frequency range from 10 MHz to 43.5 GHz. Analysis conditions: $S_{12} = S_{21} = 0$, calibration power: 0 dBm, measurement power: 0 dBm. Drift effects were not considered.

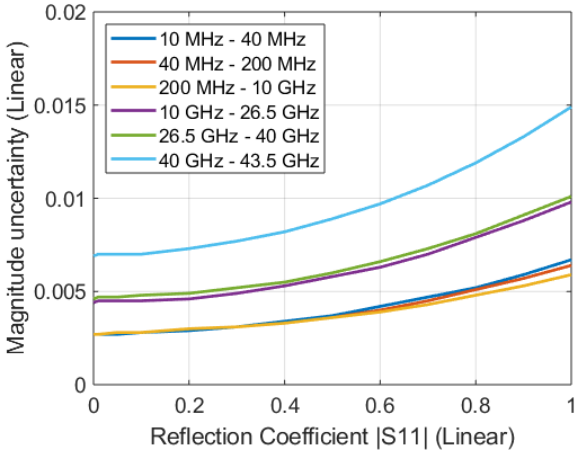

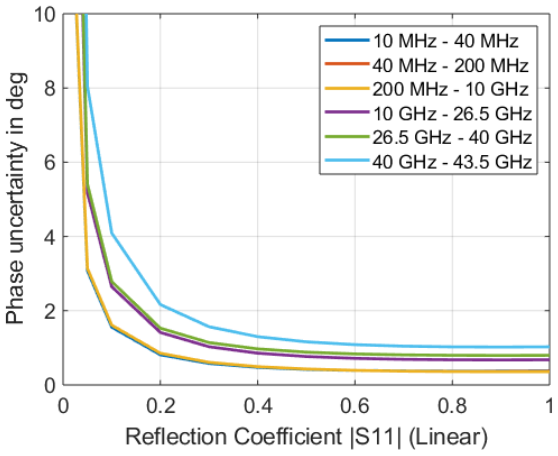

Transmission measurement accuracy of the R&S®ZNA26 and R&S®ZNA43

The diagrams below show the typical uncertainty of the transmission magnitude and transmission phase measurements for the R&S®ZNA26 in the frequency range from 10 MHz to 26.5 GHz and for the R&S®ZNA43 in the frequency range from 10 MHz to 43.5 GHz. Analysis conditions: $S_{11} = S_{22} = 0$, calibration power: 0 dBm, measurement power: 0 dBm, high-quality cable. Drift effects were not considered.

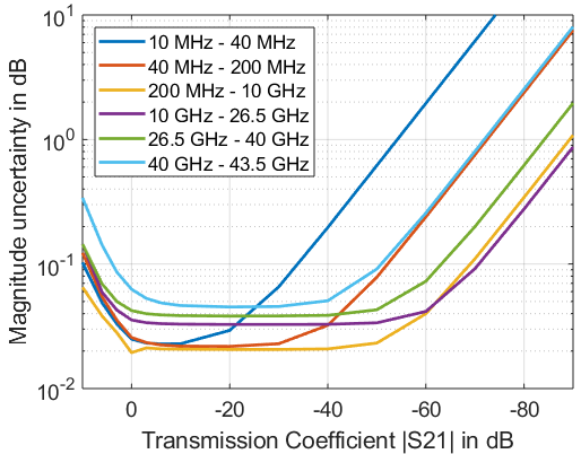

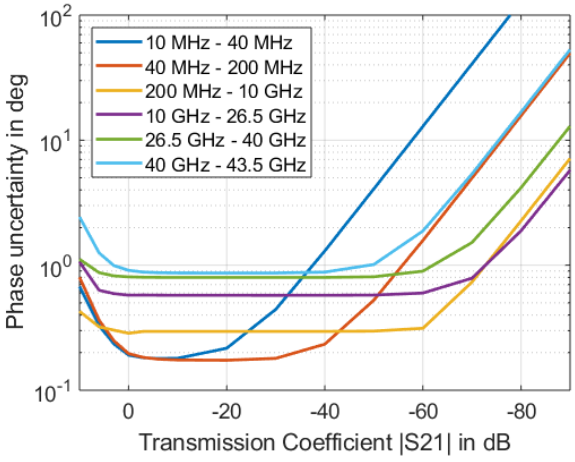

Reflection measurement accuracy of the R&S®ZNA50 and R&S®ZNA67

The diagrams below show the typical uncertainty of the reflection magnitude and reflection phase measurements for the R&S®ZNA50 in the frequency range from 10 MHz to 50 GHz and for the R&S®ZNA67 in the frequency range from 10 MHz to 67 GHz.
Analysis conditions: $S_{12} = S_{21} = 0$, calibration power: 0 dBm, measurement power: 0 dBm. Drift effects were not considered.

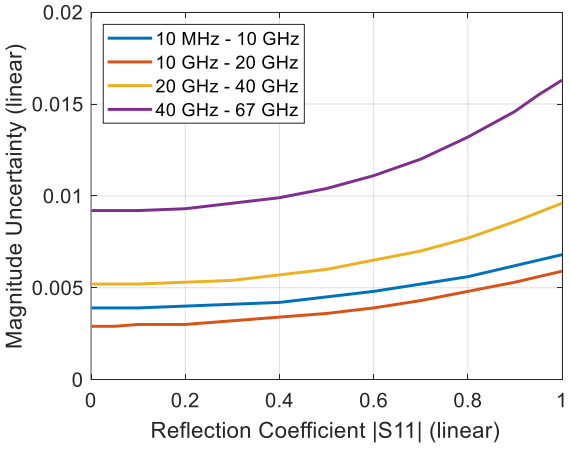

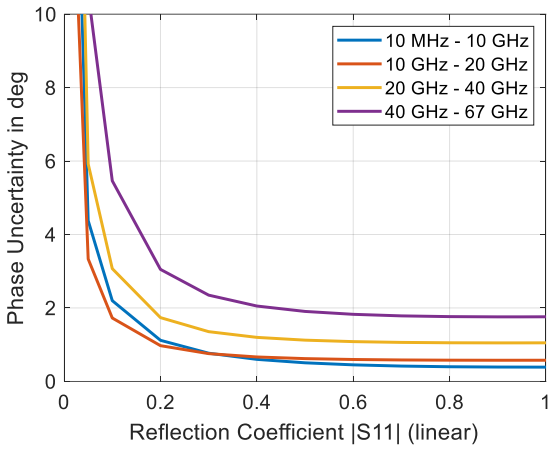

Transmission measurement accuracy of the R&S®ZNA50 and R&S®ZNA67

The diagrams below show the typical uncertainty of the transmission magnitude and transmission phase measurements for the R&S®ZNA50 in the frequency range from 10 MHz to 50 GHz and for the R&S®ZNA67 in the frequency range from 10 MHz to 67 GHz.
Analysis conditions: $S_{11} = S_{22} = 0$, calibration power: 0 dBm, measurement power: 0 dBm, high-quality cable. Drift effects were not considered.

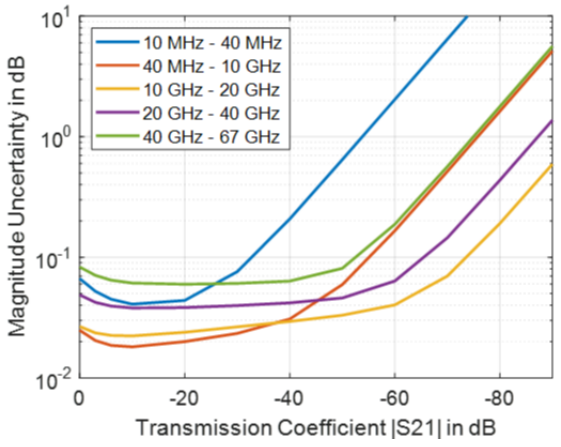

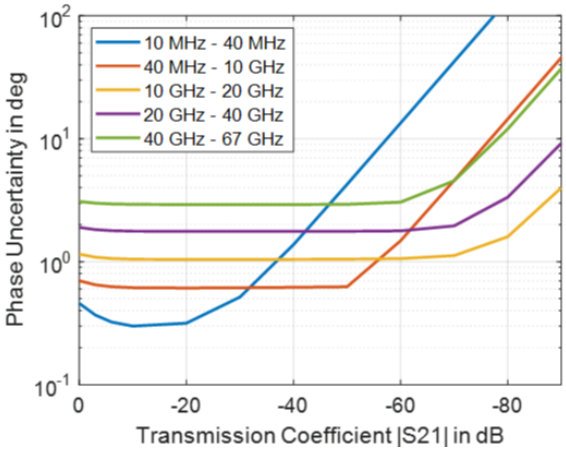

Effective system data

The data below is valid between +18 °C and +28 °C, provided the temperature has not varied by more than 1 °C after calibration. Frequency points, measurement bandwidth and sweep time have to be identical for measurement and calibration (no interpolation of the calibration). The data is based on a measurement bandwidth of 10 Hz and a nominal source power of 0 dBm.

R&S®ZNA26, calibrated with R&S®ZN-Z235 calibration kit	10 MHz to 10 GHz		10 GHz to 20 GHz		20 GHz to 26.5 GHz	
	spec.	typ.	spec.	typ.	spec.	typ.
Directivity in dB	46	49	44	47	42	45
Source match in dB	43	46	40	43	40	43
Load match in dB	45	48	43	46	41	44
Reflection tracking in dB	0.03	0.02	0.04	0.03	0.04	0.03
Transmission tracking in dB	0.02	0.01	0.03	0.02	0.03	0.02

R&S®ZNA43, 2.4 mm interface calibrated with R&S®ZN-Z224 calibration kit	10 MHz to 10 GHz		10 GHz to 20 GHz		20 GHz to 40 GHz		40 GHz to 43.5 GHz	
	spec.	typ.	spec.	typ.	spec.	typ.	spec.	typ.
Directivity in dB	46	49	44	47	42	45	40	43
Source match in dB	43	46	40	43	38	41	36	39
Load match in dB	45	48	43	46	41	44	39	42
Reflection tracking in dB	0.03	0.02	0.04	0.03	0.04	0.03	0.06	0.05
Transmission tracking in dB	0.02	0.01	0.03	0.02	0.04	0.03	0.05	0.04

R&S®ZNA43, 2.92 mm interface calibrated with R&S®ZN-Z229 calibration kit	10 MHz to 10 GHz		10 GHz to 26.5 GHz		26.5 GHz to 40 GHz		40 GHz to 43.5 GHz
	spec.	typ.	spec.	typ.	spec.	typ.	meas.
Directivity in dB	45	48	42	45	38	41	38
Source match in dB	41	44	40	43	36	39	36
Load match in dB	44	47	41	44	37	40	37
Reflection tracking in dB	0.03	0.02	0.04	0.03	0.04	0.03	0.06
Transmission tracking in dB	0.02	0.01	0.03	0.02	0.04	0.03	0.05

R&S®ZNA50, calibrated with R&S®ZN-Z224 calibration kit	10 MHz to 10 GHz		10 GHz to 20 GHz		20 GHz to 40 GHz		40 GHz to 50 GHz	
	spec.	typ.	spec.	typ.	spec.	typ.	spec.	typ.
Directivity in dB	46	49	44	47	42	45	40	43
Source match in dB	43	46	40	43	38	41	36	39
Load match in dB	45	48	43	46	41	44	39	42
Reflection tracking in dB	0.03	0.02	0.04	0.03	0.04	0.03	0.06	0.05
Transmission tracking in dB	0.02	0.01	0.03	0.02	0.04	0.03	0.06	0.05

R&S®ZNA67, calibrated with R&S®ZN-Z218 calibration kit	10 MHz to 10 GHz		10 GHz to 20 GHz		20 GHz to 40 GHz		40 GHz to 50 GHz		50 GHz to 67 GHz	
	spec.	typ.	spec.	typ.	spec.	typ.	spec.	typ.	spec.	typ.
Directivity in dB	46	49	44	47	42	45	40	43	37	40
Source match in dB	43	46	40	43	38	41	36	39	34	37
Load match in dB	45	48	43	46	41	44	39	42	36	39
Reflection tracking in dB	0.03	0.02	0.04	0.03	0.04	0.03	0.06	0.05	0.07	0.06
Transmission tracking in dB	0.02	0.01	0.03	0.02	0.04	0.03	0.06	0.05	0.06	0.05

Uncorrected system data

The data below is valid between +18 °C and +28 °C. It is based on a source power of –10 dBm and a measurement bandwidth of 1 kHz.

		spec.	typ.	meas.
Directivity in dB	R&S®ZNA26, R&S®ZNA43, R&S®ZNA50 and R&S®ZNA67			
	10 MHz to 20 MHz	> 8 dB	12 dB	
	20 MHz to 20 GHz	> 10 dB	18 dB	
	20 GHz to 35 GHz	> 8 dB	15 dB	
	35 GHz to 40 GHz	> 6 dB	10 dB	
	R&S®ZNA43, 2.4 mm interface			
	40 GHz to 43.5 GHz	> 6 dB	10 dB	
	R&S®ZNA43, 2.92 mm interface			
	40 GHz to 43.5 GHz			10 dB
	R&S®ZNA50 and R&S®ZNA67			
	40 GHz to 67 GHz	> 6 dB	10 dB	
Source match in dB	R&S®ZNA26, R&S®ZNA43, R&S®ZNA50 and R&S®ZNA67			
	10 MHz to 20 GHz	> 10 dB	18 dB	
	20 GHz to 35 GHz	> 8 dB	15 dB	
	35 GHz to 40 GHz	> 6 dB	10 dB	
	R&S®ZNA43, 2.4 mm interface			
	40 GHz to 43.5 GHz	> 6 dB	10 dB	
	R&S®ZNA43, 2.92 mm interface			
	40 GHz to 43.5 GHz			10 dB
	R&S®ZNA50 and R&S®ZNA67			
	40 GHz to 67 GHz	> 6 dB	10 dB	
Reflection tracking in dB	R&S®ZNA26, R&S®ZNA43, R&S®ZNA50 and R&S®ZNA67			
	10 MHz to 10 GHz	< 1.5 dB	0.5 dB	
	10 GHz to 26.5 GHz	< 2 dB	0.5 dB	
	26.5 GHz to 40 GHz	< 2.5 dB	0.5 dB	
	R&S®ZNA43, 2.4 mm interface			
	40 GHz to 43.5 GHz	< 3 dB	1 dB	
	R&S®ZNA43, 2.92 mm interface			
	40 GHz to 43.5 GHz			1 dB
	R&S®ZNA50 and R&S®ZNA67			
	40 GHz to 50 GHz	< 3 dB	1 dB	
	R&S®ZNA67			
	50 GHz to 67 GHz	< 3.5 dB	1 dB	
Transmission tracking in dB	R&S®ZNA26, R&S®ZNA43, R&S®ZNA50 and R&S®ZNA67			
	10 MHz to 10 GHz	< 1.5 dB	0.5 dB	
	10 GHz to 26.5 GHz	< 2 dB	0.5 dB	
	26.5 GHz to 40 GHz	< 2.5 dB	0.5 dB	
	R&S®ZNA43, 2.4 mm interface			
	40 GHz to 43.5 GHz	< 3 dB	1 dB	
	R&S®ZNA43, 2.92 mm interface			
	40 GHz to 43.5 GHz			1 dB
	R&S®ZNA50 and R&S®ZNA67			
	40 GHz to 50 GHz	< 3 dB	1 dB	
	R&S®ZNA67			
	50 GHz to 67 GHz	< 3.5 dB	1 dB	
Load match in dB	R&S®ZNA26, R&S®ZNA43, R&S®ZNA50 and R&S®ZNA67			
	10 MHz to 20 GHz	> 10 dB	18 dB	
	R&S®ZNA26, R&S®ZNA43 and R&S®ZNA67			
	20 GHz to 40 GHz	> 8 dB	15 dB	
	R&S®ZNA50			
	20 GHz to 40 GHz	> 6 dB	13 dB	
	R&S®ZNA43, 2.4 mm interface			
	40 GHz to 43.5 GHz	> 6 dB	10 dB	
	R&S®ZNA43, 2.92 mm interface			
	40 GHz to 43.5 GHz			10 dB
	R&S®ZNA50 and R&S®ZNA67			
	40 GHz to 67 GHz	> 6 dB	10 dB	

Trace stability		1 kHz IF bandwidth	100 kHz IF bandwidth		
		meas.	spec.	typ.	meas.
Trace noise magnitude (RMS) at 0 dBm source power, 0 dB reflection	R&S®ZNA26, R&S®ZNA43, R&S®ZNA50 and R&S®ZNA67				
	10 MHz to 20 MHz	0.010 dB	< 0.500 dB	0.100 dB	
	20 MHz to 50 MHz	0.005 dB	< 0.200 dB	0.050 dB	
	50 MHz to 150 MHz	0.001 dB	< 0.050 dB	0.010 dB	
	150 MHz to 500 MHz	0.001 dB	< 0.020 dB	0.002 dB	
	500 MHz to 20 GHz	0.001 dB	< 0.005 dB	0.002 dB	
	20 GHz to 40 GHz	0.001 dB	< 0.008 dB	0.003 dB	
	R&S®ZNA43, 2.4 mm interface				
	40 GHz to 43.5 GHz	0.001 dB	< 0.030 dB	0.007 dB	
	R&S®ZNA43, 2.92 mm interface				
	40 GHz to 43.5 GHz	0.001 dB			0.007 dB
	R&S®ZNA50 and R&S®ZNA67				
	40 GHz to 50 GHz		< 0.025 dB	0.007 dB	
	R&S®ZNA67				
	50 GHz to 67 GHz		< 0.030 dB	0.010 dB	
Trace noise phase (RMS) at 0 dBm source power, 0 dB reflection	R&S®ZNA26, R&S®ZNA43, R&S®ZNA50 and R&S®ZNA67				
	10 MHz to 20 MHz	0.05°	< 3.00°	0.5°	
	20 MHz to 50 MHz	0.020°	< 1.00°	0.20°	
	50 MHz to 150 MHz	0.005°	< 0.30°	0.05°	
	150 MHz to 500 MHz	0.002°	< 0.10°	0.02°	
	500 MHz to 20 GHz	0.001°	< 0.04°	0.01°	
	20 GHz to 40 GHz	0.002°	< 0.06°	0.02°	
	R&S®ZNA43, 2.4 mm interface				
	40 GHz to 43.5 GHz	0.006°	< 0.20°	0.06°	
	R&S®ZNA43, 2.92 mm interface				
	40 GHz to 43.5 GHz				0.06°
	R&S®ZNA50 and R&S®ZNA67				
	40 GHz to 50 GHz	0.006°	< 0.20°	0.06°	
	R&S®ZNA67				
	50 GHz to 67 GHz	0.006°	< 0.25°	0.12°	
Temperature dependence at 0 dB transmission or reflection	10 MHz to 5 GHz			0.01 dB/K, 0.1°/K	
	5 GHz to 40 GHz			0.02 dB/K, 0.4°/K	
	40 GHz to 67 GHz			0.04 dB/K, 0.8°/K	

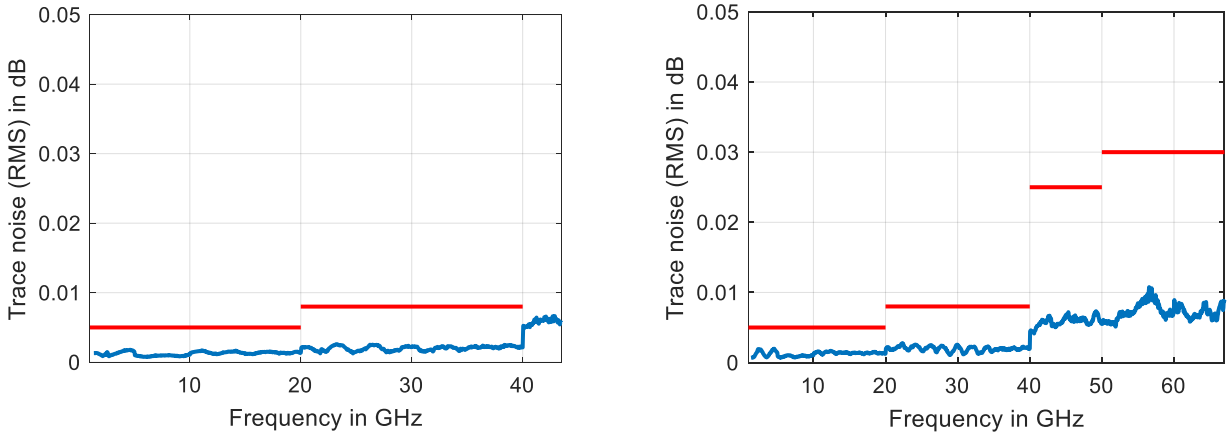

Typical trace noise magnitude in dB (RMS) versus frequency for R&S®ZNA43 (left) and R&S®ZNA67 (right) [11]

[11] At 0 dBm source power, 0 dB reflection and 100 kHz bandwidth.

Test port output

The data below is valid from +18 °C to +28 °C.

		spec.	typ.	meas.
Power range without optional source step attenuator (for data with additional source step attenuator(s) refer to Options)	R&S®ZNA26			
	10 MHz to 4 GHz	–80 dBm to +17 dBm	up to +20 dBm	
	4 GHz to 20 GHz	–80 dBm to +13 dBm	up to +18 dBm	
	20 GHz to 25 GHz	–80 dBm to +11 dBm	up to +15 dBm	
	25 GHz to 26.5 GHz	–80 dBm to +8 dBm	up to +11 dBm	
	R&S®ZNA43			
	10 MHz to 4 GHz	–80 dBm to +17 dBm	up to +20 dBm	
	4 GHz to 20 GHz	–80 dBm to +13 dBm	up to +16 dBm	
	20 GHz to 25 GHz	–80 dBm to +12 dBm	up to +15 dBm	
	25 GHz to 30 GHz	–80 dBm to +9 dBm	up to +12 dBm	
	30 GHz to 40 GHz	–80 dBm to +6 dBm	up to +9 dBm	
	R&S®ZNA43, 2.4 mm interface			
	40 GHz to 43.5 GHz	–60 dBm to +4 dBm	up to +8 dBm	
	R&S®ZNA43, 2.92 mm interface			
	40 GHz to 43.5 GHz			+8 dBm
	R&S®ZNA50			
	10 MHz to 4 GHz	–80 dBm to +16 dBm	up to +20 dBm	
	4 GHz to 20 GHz	–80 dBm to +13 dBm	up to +18 dBm	
	20 GHz to 25 GHz	–80 dBm to +12 dBm	up to +15 dBm	
	25 GHz to 30 GHz	–80 dBm to +9 dBm	up to +12 dBm	
	30 GHz to 40 GHz	–80 dBm to +6 dBm	up to +9 dBm	
	40 GHz to 45 GHz	–60 dBm to +4 dBm	–80 dBm to +7 dBm	
	45 GHz to 50 GHz	–60 dBm to +3 dBm	–80 dBm to +6 dBm	
	R&S®ZNA67			
	10 MHz to 4 GHz	–80 dBm to +16 dBm	up to +20 dBm	
	4 GHz to 20 GHz	–80 dBm to +13 dBm	up to +18 dBm	
	20 GHz to 25 GHz	–80 dBm to +11 dBm	up to +14 dBm	
	25 GHz to 30 GHz	–80 dBm to +7 dBm	up to +10 dBm	
	30 GHz to 40 GHz	–80 dBm to +4 dBm	up to +7 dBm	
	40 GHz to 67 GHz	–60 dBm to +5 dBm	–80 dBm to +8 dBm	
Minimum power level using optional source step attenuator (see Options)		–120 dBm		
Power accuracy, source power –10 dBm	R&S®ZNA26 and R&S®ZNA43			
	10 MHz to 26.5 GHz	< 2.0 dB		
	R&S®ZNA43			
	26.5 GHz to 40 GHz	< 3.0 dB		
	R&S®ZNA43, 2.4 mm interface			
	40 GHz to 43.5 GHz	< 3.0 dB		
	R&S®ZNA43, 2.92 mm interface			
	40 GHz to 43.5 GHz			3.0 dB
	R&S®ZNA50 and R&S®ZNA67			
	10 MHz to 26.5 GHz	< 2.0 dB		
	26.5 GHz to 50 GHz	< 3.0 dB		
	50 GHz to 67 GHz	< 4.0 dB		

		spec.	typ.	meas.
Power linearity referenced to –10 dBm, no power calibration	source power –40 dBm to +10 dBm [12], R&S®ZNA26, R&S®ZNA43, R&S®ZNA50 and R&S®ZNA67			
	10 MHz to 20 GHz	< 1.5 dB	0.2 dB	
	20 GHz to 40 GHz	< 2 dB	0.2 dB	
	R&S®ZNA43, 2.4 mm interface			
	40 GHz to 43.5 GHz	< 2 dB	0.2 dB	
	R&S®ZNA43, 2.92 mm interface			
	40 GHz to 43.5 GHz			0.2 dB
	R&S®ZNA50 and R&S®ZNA67			
	40 GHz to 67 GHz	< 2 dB	0.2 dB	
	source power < –40 dBm, R&S®ZNA26, R&S®ZNA43, R&S®ZNA50 and R&S®ZNA67			
	10 MHz to 20 GHz	< 2 dB	0.2 dB	
	20 GHz to 40 GHz	< 3 dB	0.2 dB	
	R&S®ZNA43, 2.4 mm interface			
	40 GHz to 43.5 GHz	< 3 dB	0.2 dB	
	R&S®ZNA43, 2.92 mm interface			
	40 GHz to 43.5 GHz			0.2 dB
	R&S®ZNA50 and R&S®ZNA67			
	40 GHz to 67 GHz	< 3 dB	0.2 dB	
Power resolution		0.01 dB		
Power accuracy, –10 dBm source power, ALC ON	R&S®ZNA26, R&S®ZNA43, R&S®ZNA50 and R&S®ZNA67			
	10 MHz to 100 MHz		2.0 dB	
	100 MHz to 26.5 GHz		1.0 dB	
	R&S®ZNA43, R&S®ZNA50 and R&S®ZNA67			
	26.5 GHz to 30 GHz		1.0 dB	
	30 GHz to 40 GHz		1.5 dB	
	40 GHz to 43.5 GHz		2.0 dB	
	R&S®ZNA50 and R&S®ZNA67			
	43.5 GHz to 50 GHz		2.0 dB	
	R&S®ZNA67			
	50 GHz to 67 GHz		2.5 dB	
Power linearity, referenced to –10 dBm, ALC ON	source power –40 dBm to +10 dBm [12], R&S®ZNA26, R&S®ZNA43, R&S®ZNA50 and R&S®ZNA67			
	10 MHz to 100 MHz		1.5 dB	
	100 MHz to 67 GHz		0.5 dB	
	source power < –40 dBm, R&S®ZNA26, R&S®ZNA43, R&S®ZNA50 and R&S®ZNA67			
	10 MHz to 100 MHz		2.0 dB	
	100 MHz to 67 GHz		1.0 dB	

		spec.	typ.	nom.
Second harmonics at –10 dBm	R&S®ZNA26 and R&S®ZNA43			
	10 MHz to 20 MHz	< –23 dBc	–30 dBc	
	20 MHz to 16 GHz	< –25 dBc	–40 dBc	
	R&S®ZNA50 and R&S®ZNA67			
	10 MHz to 20 MHz	< –23 dBc	–30 dBc	
	20 MHz to 33 GHz	< –25 dBc	–40 dBc	
Third harmonics at –10 dBm	R&S®ZNA26 and R&S®ZNA43			
	10 MHz to 20 MHz	< –23 dBc	–30 dBc	
	20 MHz to 50 MHz	< –25 dBc	–50 dBc	
	50 MHz to 13 GHz	< –40 dBc	–60 dBc	
	R&S®ZNA50 and R&S®ZNA67			
	10 MHz to 20 MHz	< –23 dBc	–30 dBc	
	20 MHz to 50 MHz	< –25 dBc	–50 dBc	
	50 MHz to 22 GHz	< –40 dBc	–60 dBc	
Nonharmonic spurious (nom.), low phase noise mode				–70 dBc

[12] Maximum power level is limited to +10 dBm or the maximum specified output power, whichever is smaller.

	Offset	100 Hz	1 kHz	10 kHz	100 kHz	200 kHz	1 MHz	5 MHz
Phase noise (meas.) in dBc (1 Hz), low phase noise mode using the internal reference	R&S®ZNA26, R&S®ZNA43, R&S®ZNA50 and R&S®ZNA67							
	10 MHz to 100 MHz	–108	–132	–137	–139	–141	–141	–142
	100 MHz to 1.25 GHz	–85	–117	–125	–122	–125	–135	–142
	1.25 GHz to 2.5 GHz	–80	–111	–119	–116	–119	–130	–143
	2.5 GHz to 5 GHz	–74	–105	–113	–111	–113	–124	–139
	5 GHz to 10 GHz	–68	–99	–107	–104	–107	–118	–133
	10 GHz to 20 GHz	–62	–94	–100	–98	–101	–112	–127
	20 GHz to 26.5 GHz	–59	–91	–98	–95	–100	–103	–117
	R&S®ZNA43, R&S®ZNA50 and R&S®ZNA67							
	26.5 GHz to 40 GHz	–56	–87	–95	–90	–95	–105	–120
	40 GHz to 43.5 GHz	–54	–86	–93	–91	–95	–98	–110
	R&S®ZNA50 and R&S®ZNA67							
	43.5 GHz to 50 GHz	–53	–85	–91	–90	–94	–97	–111

	Offset	100 Hz	1 kHz	10 kHz	100 kHz	200 kHz	1 MHz	5 MHz
Phase noise (meas.) in dBc (1 Hz), low phase noise mode using an external 1 GHz frequency reference with the external frequency reference input	R&S®ZNA26, R&S®ZNA43, R&S®ZNA50 and R&S®ZNA67							
	10 MHz to 100 MHz	–123	–133	–138	–141	–141	–142	–142
	100 MHz to 1.25 GHz	–114	–129	–132	–127	–121	–135	–143
	1.25 GHz to 2.5 GHz	–109	–123	–126	–121	–115	–127	–141
	2.5 GHz to 5 GHz	–103	–117	–120	–116	–109	–121	–136
	5 GHz to 10 GHz	–96	–110	–114	–109	–103	–117	–129
	10 GHz to 20 GHz	–90	–100	–104	–103	–97	–111	–123
	20 GHz to 26.5 GHz	–90	–98	–98	–102	–96	–103	–117
	R&S®ZNA43, R&S®ZNA50 and R&S®ZNA67							
	26.5 GHz to 40 GHz	–84	–93	–95	–98	–91	–105	–118
	40 GHz to 43.5 GHz	–84	–93	–95	–97	–91	–98	–110
	R&S®ZNA50 and R&S®ZNA67							
	43.5 GHz to 50 GHz	–81	–93	–95	–96	–90	–97	–110

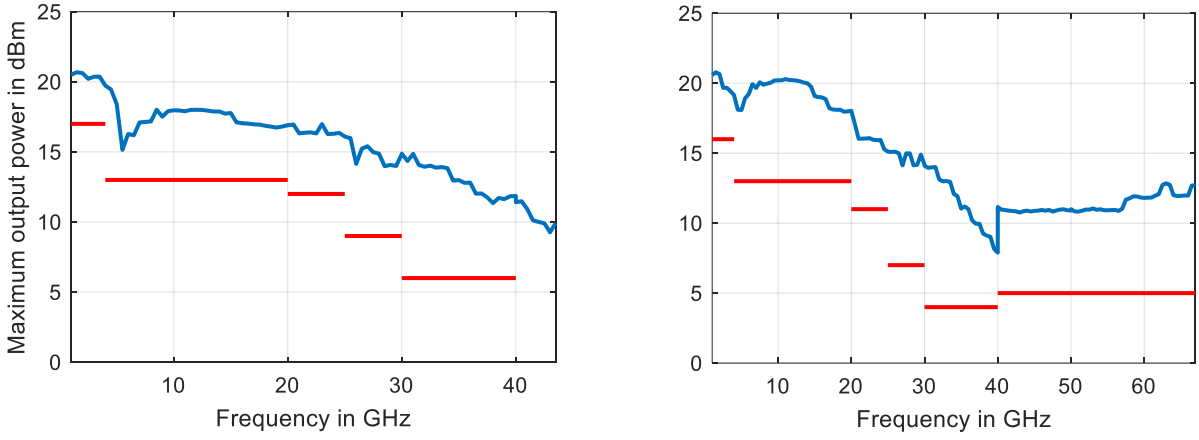

Typical maximum output power in dBm versus frequency for R&S®ZNA43 (left) and R&S®ZNA67 (right) [13]

[13] With R&S®ZNAxx-B16 option.

Test port input

		spec.	typ.	meas.
Match without system error correction, equivalent to raw test port match	R&S®ZNA26, R&S®ZNA43, R&S®ZNA50 and R&S®ZNA67			
	10 MHz to 20 GHz	> 10 dB	18 dB	
	R&S®ZNA26, R&S®ZNA43 and R&S®ZNA67			
	20 GHz to 40 GHz	> 8 dB	15 dB	
	R&S®ZNA50			
	20 GHz to 40 GHz	> 6 dB	13 dB	
	R&S®ZNA43, 2.4 mm interface			
	40 GHz to 43.5 GHz	> 6 dB	10 dB	
	R&S®ZNA43, 2.92 mm interface			
	40 GHz to 43.5 GHz			10 dB
	R&S®ZNA50 and R&S®ZNA67			
	40 GHz to 67 GHz	> 6 dB	10 dB	
Power measurement accuracy at –10 dBm with power calibration using R&S®SMARTerCal (UOSM)	R&S®ZNA26, R&S®ZNA43, R&S®ZNA50 and R&S®ZNA67			
	10 MHz to 26.5 GHz	< 0.1 dB		
	26.5 GHz to 40 GHz	< 0.2 dB		
	R&S®ZNA43, 2.4 mm interface			
	40 GHz to 43.5 GHz	< 0.2 dB		
	R&S®ZNA43, 2.92 mm interface			
	40 GHz to 43.5 GHz		0.2 dB	
	R&S®ZNA50 and R&S®ZNA67			
	40 GHz to 60 GHz	< 0.2 dB		
	60 GHz to 67 GHz	< 0.3 dB		
Power measurement accuracy at –10 dBm without power calibration from +18 °C to +28 °C	R&S®ZNA26 and R&S®ZNA43			
	10 MHz to 30 GHz	< 1.5 dB		
	30 GHz to 40 GHz	< 2.0 dB		
	R&S®ZNA43, 2.4 mm interface			
	40 GHz to 43.5 GHz	< 2.5 dB		
	R&S®ZNA43, 2.92 mm interface			
	40 GHz to 43.5 GHz			2.5 dB
	R&S®ZNA50 and R&S®ZNA67			
	40 GHz to 60 GHz	< 2.5 dB		
	60 GHz to 67 GHz	< 3.0 dB		

		spec.	typ.	meas.
Compression at test port input, > 0 dBm input level, referenced to –10 dBm	R&S®ZNA26, R&S®ZNA43, R&S®ZNA50 and R&S®ZNA67			
	10 MHz to 25 GHz, +8 dBm to +10 dBm	< 0.20 dB	0.10 dB	
	10 MHz to 40 GHz, 0 dBm to +8 dBm	< 0.20 dB	0.05 dB	
	R&S®ZNA43, 2.4 mm interface			
	40 GHz to 43.5 GHz, 0 dBm to +8 dBm	< 0.20 dB	0.05 dB	
	R&S®ZNA43, 2.92 mm interface			
	40 GHz to 43.5 GHz, 0 dBm to +8 dBm			0.05 dB
	R&S®ZNA50 and R&S®ZNA67			
	40 GHz to 67 GHz, 0 dBm to +8 dBm	< 0.20 dB	0.05 dB	
Linearity at test port input, –50 dBm to 0 dBm input level, referenced to –10 dBm	R&S®ZNA26 and R&S®ZNA43, 2.92 mm interface			
	10 MHz to 40 GHz	< 0.05 dB	0.03 dB	
	40 GHz to 43.5 GHz			0.03 dB
	R&S®ZNA43, 2.4 mm interface			
	10 MHz to 43.5 GHz	< 0.05 dB	0.03 dB	
	R&S®ZNA50			
	10 MHz to 50 GHz	< 0.05 dB	0.03 dB	
	R&S®ZNA67			
	10 MHz to 67 GHz	< 0.05 dB	0.03 dB	
Damage level		+27 dBm		
Damage DC voltage		30 V		

Standard configuration		**Base unit**			**Base unit + R&S®ZNAxx-B16 + R&S®ZNAxx-B3n [14]**		
		spec.	**typ.**	**meas.**	**spec.**	**typ.**	**meas.**
Noise level [15] at 1 kHz measurement bandwidth, normalized to 1 Hz	R&S®ZNA26, R&S®ZNA43, R&S®ZNA50 and R&S®ZNA67						
	10 MHz to 30 MHz	< –75 dBm	–100 dBm		< –85 dBm	–110 dBm	
	30 MHz to 100 MHz	< –92 dBm	–110 dBm		< –102 dBm	–120 dBm	
	100 MHz to 500 MHz	< –107 dBm	–125 dBm		< –117 dBm	–130 dBm	
	500 MHz to 30 GHz	< –120 dBm	–132 dBm		< –130 dBm	–142 dBm	
	30 GHz to 40 GHz	< –115 dBm	–130 dBm		< –122 dBm	–139 dBm	
	R&S®ZNA43, 2.4 mm interface						
	40 GHz to 43.5 GHz	< –105 dBm	–120 dBm		< –111 dBm	–126 dBm	
	R&S®ZNA43, 2.92 mm interface						
	40 GHz to 43.5 GHz			–120 dBm			–126 dBm
	R&S®ZNA50 and R&S®ZNA67						
	40 GHz to 50 GHz	< –105 dBm	–120 dBm		< –111 dBm	–126 dBm	
	50 GHz to 67 GHz	< –104 dBm	–119 dBm		< –110 dBm	–125 dBm	

Reversed coupler configuration [16]		**Base unit + R&S®ZNAxx-B16**			**Base unit + R&S®ZNAxx-B16 + R&S®ZNAxx-B3n [14]**		
		spec.	**typ.**	**meas.**	**spec.**	**typ.**	**meas.**
Noise level [15] at 1 kHz measurement bandwidth, normalized to 1 Hz	R&S®ZNA26, R&S®ZNA43, R&S®ZNA50 and R&S®ZNA67						
	10 MHz to 30 MHz	< –105 dBm	–122 dBm		< –115 dBm	–132 dBm	
	30 MHz to 100 MHz	< –117 dBm	–139 dBm		< –127 dBm	–149 dBm	
	100 MHz to 500 MHz	< –127 dBm	–141 dBm		< –137 dBm	–151 dBm	
	500 MHz to 30 GHz	< –127 dBm	–141 dBm		< –137 dBm	–151 dBm	
	30 GHz to 40 GHz	< –122 dBm	–137 dBm		< –129 dBm	–145 dBm	
	R&S®ZNA43, 2.4 mm interface						
	40 GHz to 43.5 GHz	< –112 dBm	–132 dBm		< –118 dBm	–138 dBm	
	R&S®ZNA43, 2.92 mm interface						
	40 GHz to 43.5 GHz			–132 dBm			–138 dBm
	R&S®ZNA50 and R&S®ZNA67						
	40 GHz to 50 GHz	< –110 dBm	–120 dBm		< –118 dBm	–130 dBm	
	50 GHz to 67 GHz	< –108 dBm	–120 dBm		< –116 dBm	–130 dBm	

Direct source and receiver access [17]		**Base unit + R&S®ZNAxx-B16**		
		spec.	**typ.**	**meas.**
Noise level [15] at 1 kHz measurement bandwidth, normalized to 1 Hz	R&S®ZNA26, R&S®ZNA43, R&S®ZNA50 and R&S®ZNA67			
	10 MHz to 30 MHz	< –115 dBm	–132 dBm	
	30 MHz to 100 MHz	< –127 dBm	–149 dBm	
	100 MHz to 500 MHz	< –137 dBm	–151 dBm	
	500 MHz to 30 GHz	< –137 dBm	–151 dBm	
	30 GHz to 40 GHz	< –129 dBm	–145 dBm	
	R&S®ZNA43, 2.4 mm interface			
	40 GHz to 43.5 GHz	< –118 dBm	–138 dBm	
	R&S®ZNA43, 2.92 mm interface			
	40 GHz to 43.5 GHz			–138 dBm
	R&S®ZNA50 and R&S®ZNA67			
	40 GHz to 50 GHz	< –118 dBm	–128 dBm	
	50 GHz to 67 GHz	< –116 dBm	–126 dBm	

[14] Receiver step attenuator in 0 dB position.

[15] The noise level is defined as the RMS value of the specified noise floor. For different bandwidth add [10 × log10(bandwidth / 1Hz)] to the given noise level.

[16] With the R&S®ZNAxx-B16 option installed, the jumpers of the direct source and receiver access connectors Source and Meas are swapped to horizontal position to enable the reverse coupler operation.

[17] Using the direct source and receiver access connectors Meas In and Ref In (jumpers removed) and no receiver attenuator installed or in 0 dB position.

Display

Main screen		touchscreen, 30.7 cm (12.1") diagonal, WXGA, 18-bit color LCD
Main screen resolution		1280 × 800 pixel, 125 dpi
Pixel failure rate		≤ 1×10^{-5}
Auxiliary screen		touchscreen, 17.8 cm (7") diagonal, WVGA, 18-bit color LCD
Auxiliary screen resolution		480 × 800 pixel, 125 dpi
Pixel failure rate		≤ 1.5×10^{-5}

Internal PC

Removable PC [18]		IPS 15/8
CPU		AMD R2000
Clock rate		3.35 GHz to 3.7 GHz
RAM		16 Gbyte DDR4
Operating system		Windows 11 IoT Enterprise 2024 LTSC
Solid-state drive		≥ 256 Gbyte

Front panel connectors

USB	2.0 device connector (type A)	3

Rear panel connectors

GPIB interface	remote control interface, in line with IEEE 488, IEC 60625; 24-pin	
External handler I/O	connector for R&S®ZNBT-Z14 handler I/O option (external) for R&S®ZNA	
LAN	local area network connector, 8-pin, RJ-45, 1 Gbit/s	
USB	2.0 device connector (type A)	4
USB device	2.0 secondary connector (type B)	1
External monitor	DVI-D digital-only connector	1
	DisplayPort	1

REF IN	input for external reference frequency signal	
Connector type		
BNC, female	input frequency range	1 MHz to 50 MHz
	step size	1 Hz
	input impedance	100 Ω
SMA, female	input frequency range	100 MHz or 1 GHz
	step size	fixed frequency
	input impedance	50 Ω
Maximum permissible deviation		1 kHz
Input power		–10 dBm to +15 dBm

REF OUT	output for external reference frequency signal	
Connector type		
BNC, female	output impedance	50 Ω
	output frequency	10 MHz
	output frequency accuracy	1 Hz
	output power	+9 dBm ± 4 dB

[18] Internal PC is subject to change without notice.

USER CONTROL	diverse control and trigger signals, 25-pin D-Sub, 3.3 V TTL, for controlling external generators, for limit checks, sweep signals, etc.	
CHANNEL BIT 0 to CHANNEL BIT 3	pin 8 to pin 11 (outputs)	channel-specific, user-configurable bits
CHANNEL BIT 4 to CHANNEL BIT 7	pin 16 to pin 19 (outputs)	channel-specific, user-configurable bits
DRIVE PORT 1 to DRIVE PORT 4	pin 16 to pin 19 (outputs)	indicates drive ports (can alternatively be used for channel bits 4 to 7)
PASS 1 and PASS 2	pin 13 and pin 14 (outputs)	pass/fail results of limit checks
BUSY	pin 4 (output)	measurements running
READY FOR TRIGGER	pin 6 (output)	ready for trigger
EXT GEN TRIGGER	pin 21 (output)	control signal for external generator
EXT GEN BLANK	pin 22 (input)	handshake signal from external generator
EXTERNAL TRIGGER	pin 2 (input)	first trigger input for analyzer, 5 V tolerant
EXTERNAL TRIGGER 2	pin 25 (input)	second trigger input for analyzer, 5 V tolerant

Trigger In A	trigger input for analyzer	
Connector type		BNC, female
TTL signal (edge-triggered or level-triggered)		3 V, 5 V tolerant
Polarity	selectable	positive or negative
Minimum pulse width		1 µs
Input impedance		5 kΩ (nom.)

Options

R&S®ZNA-B7 memory extension for data streaming

Timing resolution	≥ 20 MHz resolution bandwidth	8 ns
	≥ 10 MHz resolution bandwidth	16 ns
Number of wave quantities capturable	≥ 20 MHz resolution bandwidth	4
	≥ 10 MHz resolution bandwidth	8

R&S®ZNA-B8 mmWave converter LO

The data is valid in the temperature range from +18 °C to +28 °C.

Connector type		2.92 mm, female
Power range	30 MHz to 26.5 GHz	
	spec.	–10 dBm to +20 dBm
	typ.	+25 dBm
Power accuracy, –10 dBm source power	30 MHz to 26.5 GHz	
	spec.	< 2.0 dB
Power linearity referenced to 0 dBm, no power calibration	30 MHz to 26.5 GHz, –10 dBm to +20 dBm	
	spec.	< 2 dB
	typ.	0.2 dB
Power resolution	spec.	0.01 dB
Second harmonics at 0 dBm	1 GHz to 20 GHz	
	spec.	< –15 dBc
	typ.	–20 dBc
Third harmonics at 0 dBm	1 GHz to 13 GHz	
	spec.	< –25 dBc
	typ.	–30 dBc

R&S®ZNA-B15 RFFE GPIO interface

The R&S®ZNA-B15 RFFE GPIO interfaces (models .02 and .03) provide two independent MIPI RFFE busses and ten individually configurable output lanes with different power handling capabilities.

Connector type		25-pin D-Sub, female
Ground	analog and digital	pins 1, 3, 5, 11 and 22

Output voltage	Output pin	Voltage range	Voltage step size	Maximum current
RFFE port 1, VIO	pin 2	0 V to +2 V	1 mV	20 mA
RFFE port 1, DATA	pin 15	0 V to +2 V	1 mV	20 mA
RFFE port 1, CLK	pin 14	configurable clock rate: 31.25 kHz to 26 MHz		
		0 V to +2 V	1 mV	20 mA
RFFE port 2, VIO	pin 4	0 V to +2 V	1 mV	20 mA
RFFE port 2, DATA	pin 17	0 V to +2 V	1 mV	20 mA
RFFE port 2, CLK	pin 16	configurable clock rate: 31.25 kHz to 26 MHz		
		0 V to +2 V	1 mV	20 mA
GPIO 1 to GPIO 8	pin 6 to pin 9, pin 18 to pin 21	–5 V to +10 V, typ. –6 V to +12 V	5 mV	20 mA
GPIO 9 and 10	pin 10 and 23	–5 V to +10 V, typ. –6 V to +12 V	5 mV	100 mA

The R&S®ZNA-B15 RFFE GPIO interface (model .03) provides voltage and current measurement with switchable source resistance. 32 internal ADC channels measure voltage and current at each RFFE and GPIO pin simultaneously.

Voltage measurement	Input pin	Voltage range	Resolution	Accuracy [19]
RFFE port 1 and 2, VIO, DATA, CLK	pin 2 and 4, pin 14 to pin 17	0 V to +3 V	100 µV	2 % ± 20 mV
GPIO 1 to GPIO 10	pin 6 to pin 9, pin 18 to pin 21, pin 10, pin 23	–5 V to +10 V	100 µV	2 % ± 50 mV

Current measurement	Input pin	Source shunt resistor	Current range	Resolution	Accuracy [19]	Repeatability
		current values are valid for GPIO voltages from –5 V to +8 V				
RFFE port 1 and 2, VIO, DATA, CLK, GPIO 1 to GPIO 8	pin 6 to pin 9, pin 18 to pin 21	10 Ω	–20 mA to +20 mA	10 µA	2 % ± 200 µA	< 100 µA
		100 Ω	–2 mA to +2 mA	1 µA	2 % ± 20 µA	< 10 µA
		1 kΩ	–200 µA to +200 µA	100 nA	3 % ± 3 µA	< 1 µA
		10 kΩ	–20 µA to +20 µA	10 nA	5 % ± 500 nA	< 100 nA
		100 kΩ	–2 µA to +2 µA	1 nA	5 % ± 50 nA	< 10 nA
GPIO 9 and 10	pin 10 and 23		–100 mA to +100 mA	10 µA	3 % ± 3 mA	< 100 µA

[19] x % ± y is to be understood as x % of reading ± y.

R&S®ZNA-B26 direct IF access

Connector type		SMA, female
Impedance		50 Ω (nom.)
Frequency range	input (125 MHz ADC clock)	100 kHz to 1 GHz (nom.)
	output, RF ≤ 5 GHz	100 kHz to 60 MHz (nom.)
	output, RF > 5 GHz	100 kHz to 2 GHz (nom.)
Damage level		+20 dBm, 10 V DC
Interfaces		
IF Reference 1		input/output
IF Meas 1		input/output
IF Reference 2		input/output
IF Meas 2		input/output
IF Reference 3	4-port model	input/output
IF Meas 3	4-port model	input/output
IF Reference 4	4-port model	input/output
IF Meas 4	4-port model	input/output
Input 0.1 dB compression	30 MHz, IF gain: 0 dB	–4 dBm (meas.)
Input noise floor	30 MHz, IF gain: 10 dB, at 1 kHz measurement bandwidth, normalized to 1 Hz	–165 dBm (meas.)

R&S®ZNA-B91 trigger and control I/O board

Connector type		BNC, female
Interfaces		
Trigger In B	input	3 V, 5 V tolerant, impedance: 10 kΩ (nom.)
Trigger In C		
Trigger In D		
Trigger Out A	output	logic high: typ. 5 V, impedance: 50 Ω (nom.)
Trigger Out B		
Trigger Out C		
Trigger Out D		
PuMo In/Out A	input/output	input: 3 V, 5 V tolerant, impedance: 10 kΩ (nom.)
PuMo In/Out B		
PuMo In/Out C		output, logic high: typ. 5 V, impedance: 50 Ω (nom.)
PuMo In/Out D		
Ready for Trigger	output	logic high: typ. 5 V, impedance: 50 Ω (nom.)
Busy	output	logic high: typ. 5 V, impedance: 50 Ω (nom.)
RF Off Control	input	pull-up resistor: 4.7 kΩ on 3.3 V

R&S®ZNA26-B16, R&S®ZNA43-B16, R&S®ZNA50-B16 and R&S®ZNA67-B16 direct source and receiver access

Connector type	R&S®ZNA26-B16, R&S®ZNA43-B16	2.92 mm, female
	R&S®ZNA50-B16, R&S®ZNA67-B16	1.85 mm, female
Frequency range	R&S®ZNA26-B16	
	spec.	10 MHz to 26.5 GHz
	nom.	100 kHz to 26.5 GHz
	R&S®ZNA43-B16, test port 2.4 mm interface	
	spec.	10 MHz to 40 GHz
	meas.	40 GHz to 43.5 GHz
	nom.	100 kHz to 43.5 GHz
	R&S®ZNA43-B16, test port 2.92 mm interface	
	spec.	10 MHz to 40 GHz
	meas.	40 GHz to 43.5 GHz
	nom.	100 kHz to 43.5 GHz
	R&S®ZNA50-B16	
	spec.	10 MHz to 50 GHz
	nom.	100 kHz to 50 GHz
	R&S®ZNA67-B16	
	spec.	10 MHz to 67 GHz
	nom.	100 kHz to 67 GHz
Damage level	Source In	+30 dBm, 30 V DC
	other inputs	+20 dBm, 0 V DC
Dynamic range is reduced by	10 MHz to 1 GHz	0 dB
	1 GHz to 40 GHz	2 dB
	40 GHz to 50 GHz	3 dB
	50 GHz to 60 GHz	4 dB
	60 GHz to 67 GHz	5 dB
Input 0.1 dB compression, receiver step attenuator: 0 dB	≤ 10 GHz	–8 dBm (meas.)
	> 10 GHz	–6 dBm (meas.)

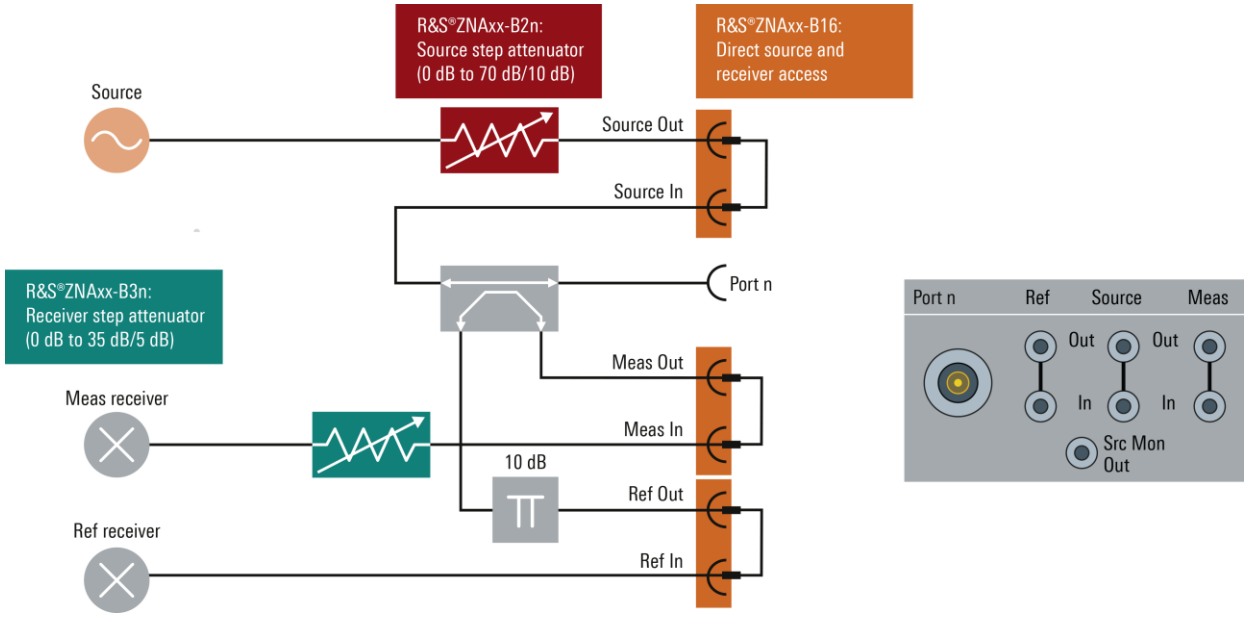

Test set configuration for R&S®ZNAxx-B16 direct source and receiver access

R&S®ZNA26-B21/-B22/-B23/-B24, R&S®ZNA43-B21/-B22/-B23/-B24, R&S®ZNA50-B21/-B22/-B23/-B24 and R&S®ZNA67-B21/-B22/-B23/-B24 source step attenuators

Frequency range	R&S®ZNA26-B21/-B22/-B23/-B24	10 MHz to 26.5 GHz
	R&S®ZNA43-B21/-B22/-B23/-B24	10 MHz to 43.5 GHz
	R&S®ZNA50-B21/-B22/-B23/-B24	10 MHz to 50 GHz
	R&S®ZNA67-B21/-B22/-B23/-B24	10 MHz to 67 GHz
Attenuation (nom.)	R&S®ZNA26-B21/-B22/-B23/-B24, R&S®ZNA43-B21/-B22/-B23/-B24	0 dB to 70 dB, in 10 dB steps
	R&S®ZNA50-B21/-B22/-B23/-B24 (order no. 1332.5007.2x), R&S®ZNA67-B21/-B22/-B23/-B24 (order no. 1332.5013.2x)	0 dB to 70 dB, in 10 dB steps
Minimum output power is reduced to		–120 dBm
Maximum output power and dynamic range are reduced by	R&S®ZNA26-B21/-B22/-B23/-B24, R&S®ZNA43-B21/-B22/-B23/-B24	
	10 MHz to 16 GHz	1 dB
	16 GHz to 30 GHz	2 dB
	30 GHz to 40 GHz	3 dB
	40 GHz to 43.5 GHz	4 dB
	R&S®ZNA50-B21/-B22/-B23/-B24, R&S®ZNA67-B21/-B22/-B23/-B24	
	10 MHz to 4 GHz	1 dB
	4 GHz to 16 GHz	2 dB
	16 GHz to 30 GHz	3 dB
	30 GHz to 40 GHz	4 dB
	40 GHz to 67 GHz	5 dB

R&S®ZNA26-B31/-B32/-B33/-B34, R&S®ZNA43-B31/-B32/-B33/-B34, R&S®ZNA50-B31/-B32/-B33/-B34 and R&S®ZNA67-B31/-B32/-B33/-B34 receiver step attenuators

Frequency range	R&S®ZNA26-B31/-B32/-B33/-B34	10 MHz to 26.5 GHz
	R&S®ZNA43-B31/-B32/-B33/-B34	10 MHz to 43.5 GHz
	R&S®ZNA50-B31/-B32/-B33/-B34	10 MHz to 50 GHz
	R&S®ZNA67-B31/-B32/-B33/-B34	10 MHz to 67 GHz
Attenuation	10 dB preset setting	0 dB to 35 dB, in 5 dB steps
Step attenuator accuracy; attenuation > 0 dB, referenced to attenuation = 10 dB	10 MHz to 20 GHz	≤ 1 dB
	20 GHz to 40 GHz	≤ 1.5 dB
	40 GHz to 50 GHz	≤ 2 dB
	50 GHz to 60 GHz	≤ 2.5 dB
	60 GHz to 67 GHz	≤ 3 dB
Dynamic range is increased by	10 MHz to 500 MHz	0 dB
	500 MHz to 1 GHz	5 dB
	1 GHz to 30 GHz	8 dB
	30 GHz to 40 GHz	7 dB
	40 GHz to 67 GHz	6 dB
Noise floor is reduced by	10 MHz to 30 GHz	10 dB
	30 GHz to 40 GHz	7 dB
	40 GHz to 67 GHz	6 dB

R&S®ZNA26-B41/-B42/-B43/-B44, R&S®ZNA43-B41/-B42/-B43/-B44, R&S®ZNA50-B41/-B42/-B43/-B44 and R&S®ZNA67-B41/-B42/-B43/-B44 internal pulse modulators

Frequency range	R&S®ZNA26-B41/-B42/-B43/-B44	10 MHz to 26.5 GHz
	R&S®ZNA43-B41/-B42/-B43/-B44	10 MHz to 43.5 GHz
	R&S®ZNA50-B41/-B42/-B43/-B44	10 MHz to 50 GHz
	R&S®ZNA67-B41/-B42/-B43/-B44	10 MHz to 67 GHz
Pulse generator	pulse period	200 ns to 30 s, in 8 ns steps (nom.)
	pulse width	8 ns to 15 s, in 4 ns steps (nom.)
Pulse modulator	minimum pulse width	40 ns (nom.)
On/off ratio	10 MHz to 18 GHz	80 dB (nom.)
	18 GHz to 67 GHz	100 dB (nom.)
Rise/fall time		20 ns (nom.)
Dynamic range		no impact

R&S®ZNA26-B161, R&S®ZNA43-B161, R&S®ZNA50-B161, R&S®ZNA67-B161 source monitor access port 1 and R&S®ZNA26-B163, R&S®ZNA43-B163, R&S®ZNA50-B163, R&S®ZNA67-B163 source monitor access port 1 and port 3

Connector type	R&S®ZNA26-B161/-B163, R&S®ZNA43-B161/-B163	2.92 mm, female
	R&S®ZNA50-B161/-B163, R&S®ZNA67-B161/-B163	1.85 mm, female
Frequency range	R&S®ZNA26-B161/-B163	10 MHz to 26.5 GHz
	R&S®ZNA43-B161/-B163	10 MHz to 43.5 GHz
	R&S®ZNA50-B161/-B163	10 MHz to 50 GHz
	R&S®ZNA67-B161/-B163	10 MHz to 67 GHz
Nominal reference path attenuation		20 dB (nom.)
Maximum output power and dynamic range are reduced by	10 MHz to 30 GHz	2 dB
	30 GHz to 40 GHz	3 dB
	40 GHz to 50 GHz	4 dB
	50 GHz to 67 GHz	5 dB

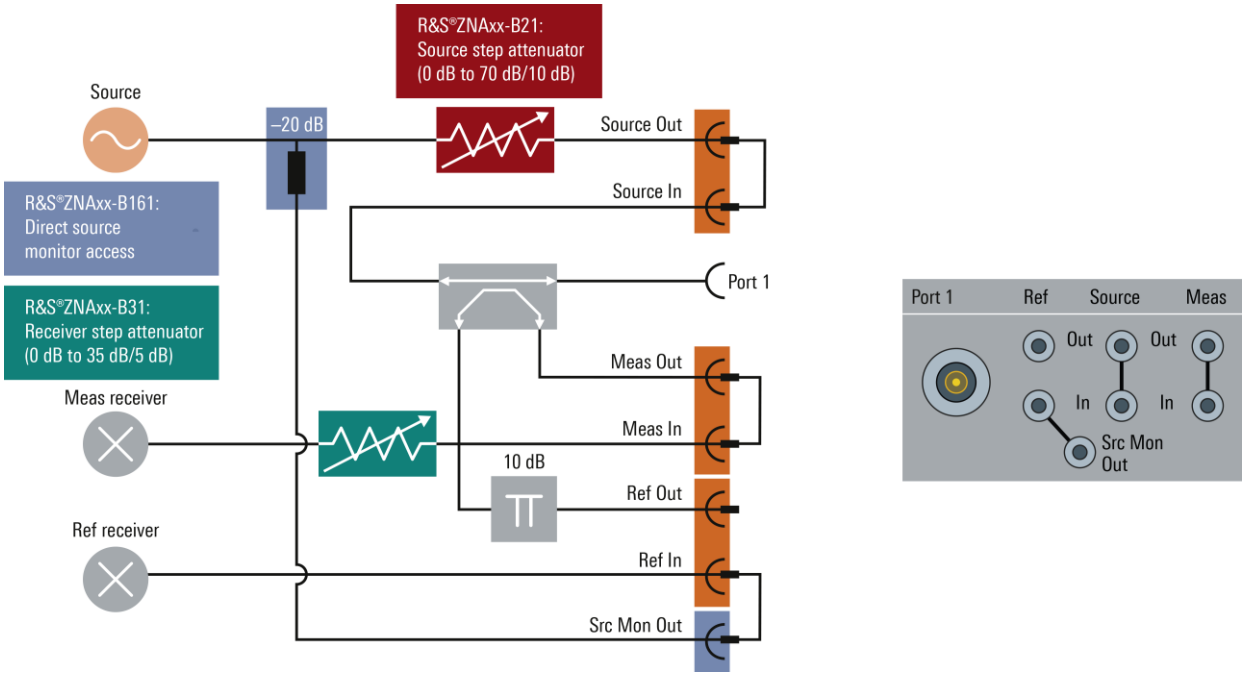

Test set configuration for R&S®ZNAxx-B161 source monitor access port 1

R&S®ZNA26-B212, R&S®ZNA43-B212, R&S®ZNA50-B212, R&S®ZNA67-B212 internal combiner, port 1 and port 2

Frequency range	R&S®ZNA26-B212	10 MHz to 26.5 GHz
	R&S®ZNA43-B212	10 MHz to 43.5 GHz
	R&S®ZNA50-B212	10 MHz to 50 GHz
	R&S®ZNA67-B212	10 MHz to 67 GHz
Maximum output power and dynamic range are reduced by	10 MHz to 30 GHz	1 dB
	30 GHz to 40 GHz	2 dB
	40 GHz to 50 GHz	3 dB
	50 GHz to 67 GHz	4 dB
Maximum output power and dynamic range in combined state for ports 1 and 2 are reduced by	10 MHz to 30 MHz	10 dB
	30 MHz to 100 MHz	7 dB
	100 MHz to 1 GHz	6 dB
	1 GHz to 16 GHz	7 dB
	16 GHz to 30 GHz	8 dB
	30 GHz to 50 GHz	9 dB
	50 GHz to 67 GHz	10 dB
Power range		no impact
Power accuracy		no impact

Measurements in reverse direction (load match) are possible with enabled internal combiner for two tone signals.

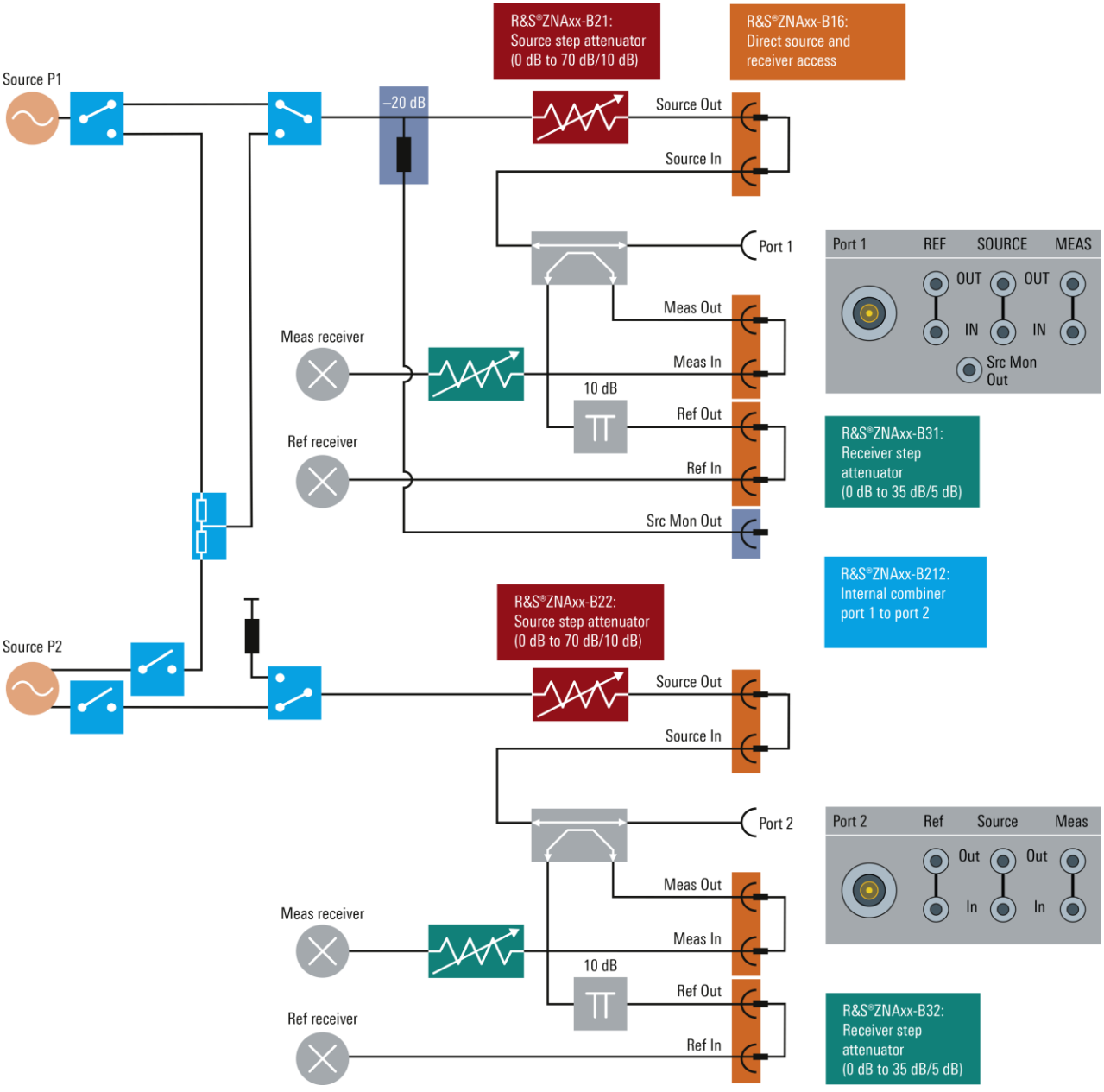

Test set configuration for R&S®ZNAxx-B212 internal combiner, port 1 and port 2

R&S®ZNA26-B213, R&S®ZNA43-B213, R&S®ZNA50-B213, R&S®ZNA67-B213 internal combiner, port 1 and port 3

Frequency range	R&S®ZNA26-B213	10 MHz to 26.5 GHz
	R&S®ZNA43-B213	10 MHz to 43.5 GHz
	R&S®ZNA50-B213	10 MHz to 50 GHz
	R&S®ZNA67-B213	10 MHz to 67 GHz
Maximum output power and dynamic range are reduced by	10 MHz to 30 GHz	1 dB
	30 GHz to 40 GHz	2 dB
	40 GHz to 50 GHz	3 dB
	50 GHz to 67 GHz	4 dB
Maximum output power and dynamic range in combined state for ports 1 and 3 are reduced by	10 MHz to 30 MHz	10 dB
	30 MHz to 100 MHz	7 dB
	100 MHz to 1 GHz	6 dB
	1 GHz to 16 GHz	7 dB
	16 GHz to 30 GHz	8 dB
	30 GHz to 50 GHz	9 dB
	50 GHz to 67 GHz	10 dB
Power range		no impact
Power accuracy		no impact

Measurements in reverse direction (load match) are possible with enabled internal combiner for two tone signals.

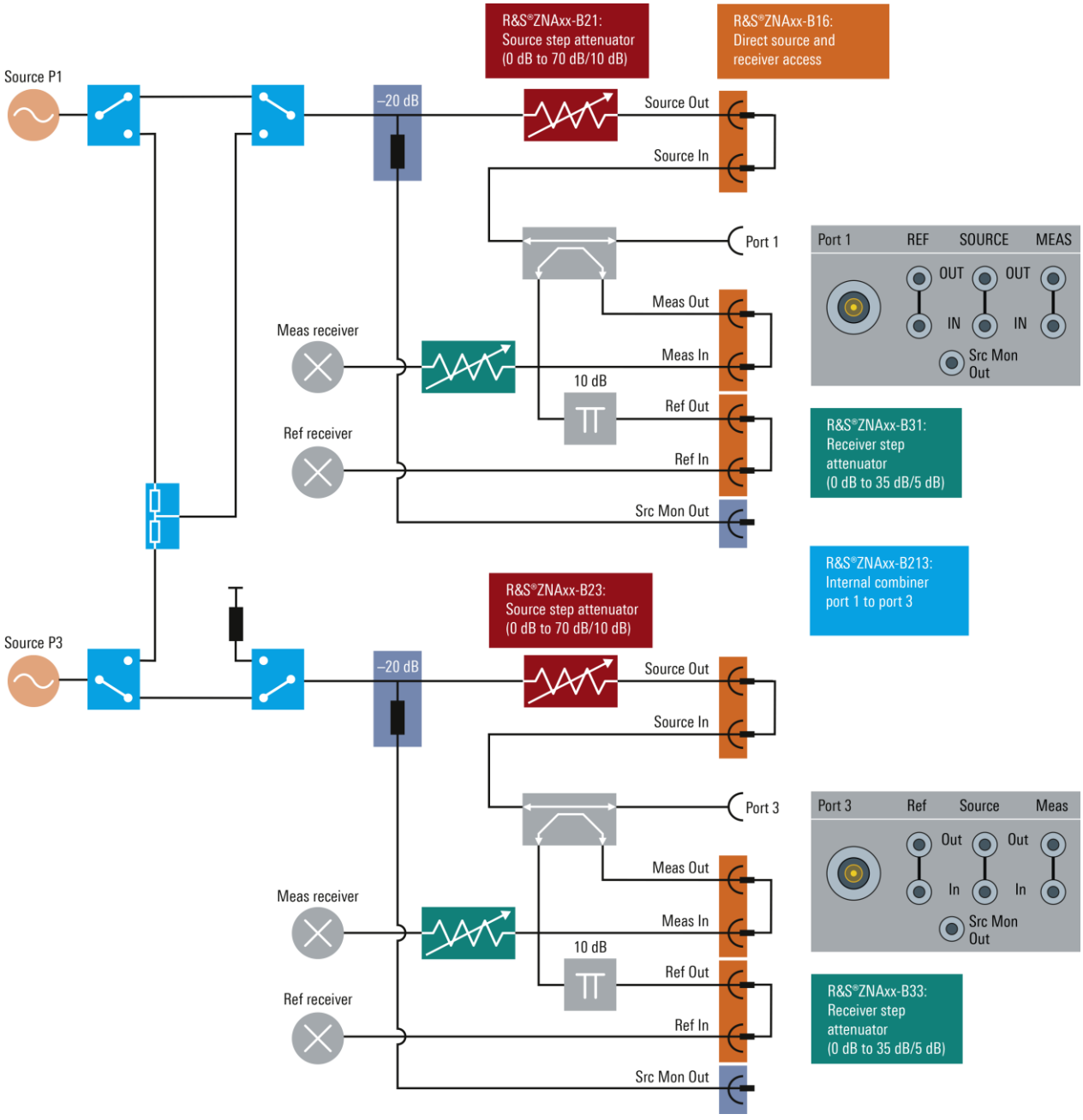

Test set configuration for R&S®ZNAxx-B213 internal combiner, port 1 and port 3

R&S®ZNA26-B302, R&S®ZNA43-B302, R&S®ZNA50-B302, R&S®ZNA67-B302, R&S®ZNA50-B312, R&S®ZNA67-B312 low-noise amplifier, port 2

Frequency range	R&S®ZNA26-B302	10 MHz to 26.5 GHz
	R&S®ZNA43-B302	10 MHz to 43.5 GHz
	R&S®ZNA50-B302	10 MHz to 50 GHz
	R&S®ZNA67-B302	10 MHz to 67 GHz
Input noise and dynamic range are reduced by	10 MHz to 40 GHz	3 dB
	40 GHz to 67 GHz	4 dB
Power measurement accuracy at –20 dBm without power calibration from +18 °C to +28 °C	10 MHz to 30 GHz	< 2.5 dB
	30 GHz to 40 GHz	< 3.0 dB
	40 GHz to 50 GHz	< 4.0 dB
	50 GHz to 67 GHz	< 4.5 dB
Noise level at 1 kHz measurement bandwidth, normalized to 1 Hz, LNA: bypass mode, normal port configuration	R&S®ZNA26-B302, R&S®ZNA43-B302	
	10 MHz to 30 MHz	< –80 dBm
	30 MHz to 100 MHz	< –95 dBm
	100 MHz to 500 MHz	< –105 dBm
	500 MHz to 1 GHz	< –120 dBm
	1 GHz to 20 GHz	< –115 dBm
	20 GHz to 30 GHz	< –110 dBm
	30 GHz to 35 GHz	< –100 dBm
	35 GHz to 43.5 GHz	< –90 dBm
	R&S®ZNA50-B302, R&S®ZNA67-B302	
	10 MHz to 30 MHz	< –80 dBm
	30 MHz to 100 MHz	< –95 dBm
	100 MHz to 500 MHz	< –105 dBm
	500 MHz to 1 GHz	< –120 dBm
	1 GHz to 8 GHz	< –110 dBm
	8 GHz to 30 GHz	< –115 dBm
	30 GHz to 40 GHz	< –105 dBm
	40 GHz to 67 GHz	< –95 dBm
Noise level at 1 kHz measurement bandwidth, normalized to 1 Hz, LNA: low gain mode, normal port configuration	R&S®ZNA26-B302, R&S®ZNA43-B302	
	10 MHz to 30 MHz	< –85 dBm
	30 MHz to 100 MHz	< –95 dBm
	100 MHz to 500 MHz	< –110 dBm
	500 MHz to 1 GHz	< –120 dBm
	1 GHz to 8 GHz	< –120 dBm
	8 GHz to 15 GHz	< –130 dBm
	15 GHz to 30 GHz	< –120 dBm
	30 GHz to 43.5 GHz	< –110 dBm
	R&S®ZNA50-B302, R&S®ZNA67-B302	
	10 MHz to 30 MHz	< –85 dBm
	30 MHz to 100 MHz	< –95 dBm
	100 MHz to 500 MHz	< –105 dBm
	500 MHz to 8 GHz	< –120 dBm
	8 GHz to 25 GHz	< –135 dBm
	25 GHz to 40 GHz	< –130 dBm
	40 GHz to 67 GHz	< –120 dBm
Noise level at 1 kHz measurement bandwidth, normalized to 1 Hz, LNA: medium gain mode, normal port configuration	R&S®ZNA26-B302, R&S®ZNA43-B302	
	10 MHz to 30 MHz	< –90 dBm
	30 MHz to 100 MHz	< –105 dBm
	100 MHz to 500 MHz	< –115 dBm
	500 MHz to 8 GHz	< –130 dBm
	8 GHz to 20 GHz	< –140 dBm
	20 GHz to 35 GHz	< –130 dBm
	35 GHz to 43.5 GHz	< -120 dBm
	R&S®ZNA50-B302, R&S®ZNA67-B302	
	10 MHz to 30 MHz	< –90 dBm
	30 MHz to 100 MHz	< –105 dBm
	100 MHz to 500 MHz	< –115 dBm
	500 MHz to 8 GHz	< –130 dBm
	8 GHz to 40 GHz	< –140 dBm
	40 GHz to 67 GHz	< –130 dBm

Noise level at 1 kHz measurement bandwidth, normalized to 1 Hz, LNA: high gain mode, normal coupler configuration	R&S®ZNA26-B302, R&S®ZNA43-B302	
	10 MHz to 30 MHz	< –100 dBm
	30 MHz to 100 MHz	< –110 dBm
	100 MHz to 500 MHz	< –125 dBm
	500 MHz to 43.5 GHz	< –135 dBm
	R&S®ZNA50-B302, R&S®ZNA67-B302	
	10 MHz to 30 MHz	< –100 dBm
	30 MHz to 100 MHz	< –110 dBm
	100 MHz to 500 MHz	< –120 dBm
	500 MHz to 40 GHz	< –140 dBm
	40 GHz to 67 GHz	< –130 dBm
Noise level at 1 kHz measurement bandwidth, normalized to 1 Hz, LNA: high gain mode, reverse coupler configuration	R&S®ZNA26-B302, R&S®ZNA43-B302	
	10 MHz to 30 MHz	–144 dBm (meas.)
	30 MHz to 100 MHz	–164 dBm (meas.)
	100 MHz to 500 MHz	–166 dBm (meas.)
	500 MHz to 43.5 GHz	–157 dBm (meas.)
	R&S®ZNA50-B302, R&S®ZNA67-B302	
	10 MHz to 30 MHz	–144 dBm (meas.)
	30 MHz to 100 MHz	–164 dBm (meas.)
	100 MHz to 500 MHz	–166 dBm (meas.)
	500 MHz to 30 GHz	–164 dBm (meas.)
	30 GHz to 40 GHz	–162 dBm (meas.)
	40 GHz to 50 GHz	–160 dBm (meas.)
	50 GHz to 67 GHz	–154 dBm (meas.)
Damage level at test port		0 dBm
Test port input 0.1 dB compression, LNA: high gain mode, reversed coupler configuration	referenced to –60 dBm	–45 dBm (meas.)
Receiver noise figure, LNA: high gain mode, reversed coupler configuration	100 MHz to 40 GHz	17 dB (meas.)
	40 GHz to 67 GHz	20 dB (meas.)
LNA gain high gain mode, filter bank active	R&S®ZNA26-B302, R&S®ZNA43-B302	
	10 MHz to 12 GHz	35 dB (meas.)
	12 GHz to 20 GHz	33 dB (meas.)
	20 GHz to 33 GHz	28 dB (meas.)
	33 GHz to 43.5 GHz	30 dB (meas.)
	R&S®ZNA50-B302, R&S®ZNA67-B302	
	10 MHz to 8 GHz	35 dB (meas.)
	8 GHz to 20 GHz	40 dB (meas.)
	20 GHz to 40 GHz	35 dB (meas.)
	40 GHz to 55 GHz	45 dB (meas.)
	55 GHz to 65 GHz	40 dB (meas.)
	65 GHz to 67 GHz	35 dB (meas.)
LNA gain medium gain mode, filter bank active	R&S®ZNA26-B302, R&S®ZNA43-B302	
	10 MHz to 12 GHz	25 dB (meas.)
	12 GHz to 20 GHz	20 dB (meas.)
	20 GHz to 33 GHz	15 dB (meas.)
	33 GHz to 43.5 GHz	20 dB (meas.)
	R&S®ZNA50-B302, R&S®ZNA67-B302	
	10 MHz to 8 GHz	23 dB (meas.)
	8 GHz to 20 GHz	30 dB (meas.)
	20 GHz to 40 GHz	26 dB (meas.)
	40 GHz to 55 GHz	35 dB (meas.)
	55 GHz to 65 GHz	33 dB (meas.)
	65 GHz to 67 GHz	26 dB (meas.)
LNA gain low gain mode, filter bank active	R&S®ZNA26-B302, R&S®ZNA43-B302	
	10 MHz to 12 GHz	10 dB (meas.)
	12 GHz to 20 GHz	5 dB (meas.)
	20 GHz to 33 GHz	0 dB (meas.)
	33 GHz to 43.5 GHz	5 dB (meas.)
	R&S®ZNA50-B302, R&S®ZNA67-B302	
	10 MHz to 8 GHz	13 dB (meas.)
	8 GHz to 20 GHz	18 dB (meas.)
	20 GHz to 40 GHz	15 dB (meas.)
	40 GHz to 55 GHz	25 dB (meas.)
	55 GHz to 65 GHz	22 dB (meas.)
	65 GHz to 67 GHz	15 dB (meas.)

LNA gain bypass mode, filter bank inactive	R&S®ZNA26-B302, R&S®ZNA43-B302	
	10 MHz to 12 GHz	> –10 dB (meas.)
	12 GHz to 20 GHz	> –14 dB (meas.)
	20 GHz to 33 GHz	> –19 dB (meas.)
	33 GHz to 43.5 GHz	> –23 dB (meas.)
	R&S®ZNA50-B302, R&S®ZNA67-B302	
	10 MHz to 8 GHz	> –8 dB (meas.)
	8 GHz to 20 GHz	> –12 dB (meas.)
	20 GHz to 40 GHz	> –17 dB (meas.)
	40 GHz to 55 GHz	> –21 dB (meas.)
	55 GHz to 65 GHz	> –27 dB (meas.)
	65 GHz to 67 GHz	> –28 dB (meas.)

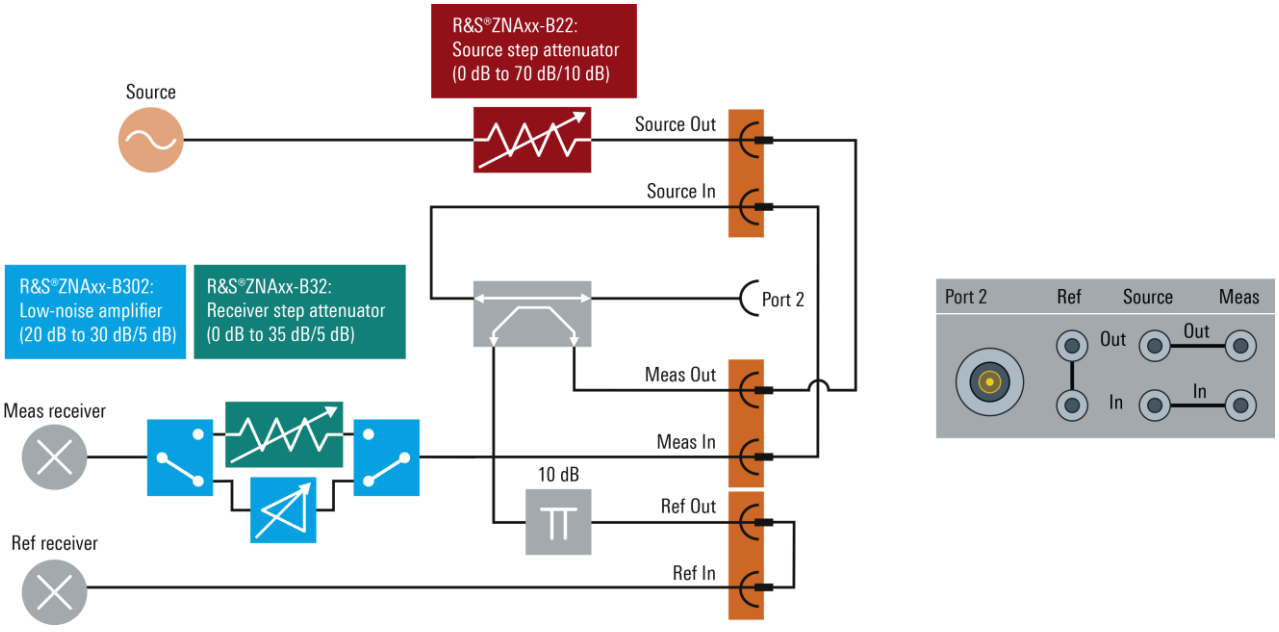

Test set configuration for R&S®ZNAxx-B302 low-noise amplifier port 2, with reversed coupler configuration

R&S®ZNA26-B501, R&S®ZNA43-B501, R&S®ZNA50-B501, R&S®ZNA67-B501, R&S®ZNA50-B511, R&S®ZNA67-B511 low power spurious reduction, port 1

Frequency range	R&S®ZNA26-B501	10 MHz to 26.5 GHz
	R&S®ZNA43-B501	10 MHz to 43.5 GHz
	R&S®ZNA50-B501	10 MHz to 50 GHz
	R&S®ZNA67-B501	10 MHz to 67 GHz
Input noise and dynamic range are reduced by	10 MHz to 40 GHz	3 dB
	40 GHz to 67 GHz	4 dB
Power measurement accuracy at –10 dBm without power calibration from +18 °C to +28 °C	10 MHz to 30 GHz	< 2 dB
	30 GHz to 40 GHz	< 2.5 dB
	40 GHz to 50 GHz	< 3.5 dB
	50 GHz to 67 GHz	< 4 dB
Noise level at 1 kHz measurement bandwidth, normalized to 1 Hz, 0 dB receiver step attenuation, normal port configuration	R&S®ZNA26-B501	
	10 MHz to 30 MHz	< –90 dBm
	30 MHz to 100 MHz	< –112 dBm
	100 MHz to 500 MHz	< –127 dBm
	500 MHz to 26.5 GHz	< –140 dBm
	R&S®ZNA43-B501, R&S®ZNA50-B501, R&S®ZNA67-B501	
	10 MHz to 30 MHz	< –90 dBm
	30 MHz to 100 MHz	< –107 dBm
	100 MHz to 500 MHz	< –121 dBm
	500 MHz to 30 GHz	< –135 dBm
	30 GHz to 40 GHz	< –130 dBm
	40 GHz to 50 GHz	< –125 dBm
	50 GHz to 67 GHz	< –120 dBm
Noise level at 1 kHz measurement bandwidth, normalized to 1 Hz, low-noise amplifier: 30 dB gain, reversed coupler configuration	R&S®ZNA26-B501	
	10 MHz to 30 MHz	–144 dBm (meas.)
	30 MHz to 100 MHz	–153 dBm (meas.)
	100 MHz to 500 MHz	–157 dBm (meas.)
	500 MHz to 26.5 GHz	–156 dBm (meas.)
	R&S®ZNA43-B501	
	10 MHz to 30 MHz	–144 dBm (meas.)
	30 MHz to 100 MHz	–153 dBm (meas.)
	100 MHz to 500 MHz	–157 dBm (meas.)
	500 MHz to 30 GHz	–156 dBm (meas.)
	30 GHz to 40 GHz	–155 dBm (meas.)
	R&S®ZNA50-B501, R&S®ZNA67-B501	
	10 MHz to 30 MHz	–144 dBm (meas.)
	30 MHz to 100 MHz	–153 dBm (meas.)
	100 MHz to 500 MHz	–157 dBm (meas.)
	500 MHz to 30 GHz	–156 dBm (meas.)
	30 GHz to 40 GHz	–155 dBm (meas.)
	40 GHz to 50 GHz	–151 dBm (meas.)
	50 GHz to 67 GHz	–145 dBm (meas.)
Measured low power spurious level, with R&S®ZNAxx-B161/-B163, source step attenuation: 40 dB or higher, at test port	10 MHz to 22 GHz	–110 dBm (meas.)
	22 GHz to 67 GHz	–100 dBm (meas.)

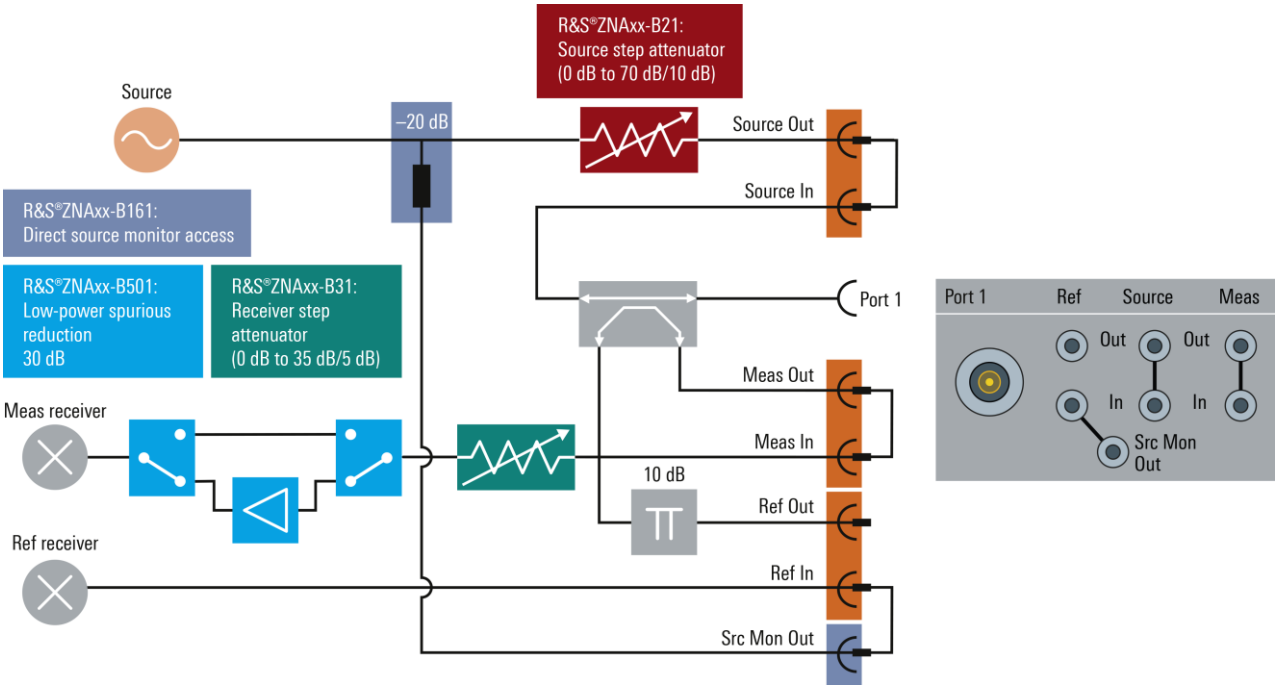

Test set configuration for R&S®ZNAxx-B501 low power spurious reduction port 1

R&S®ZNA-K1 spectrum analyzer mode (based on fast Fourier transform)

Impedance		50 Ω
Test port connector	R&S®ZNA26	3.5 mm, male, ruggedized
	R&S®ZNA43, 2.4 mm interface	2.4 mm, male, ruggedized
	R&S®ZNA43, 2.92 mm interface	2.92 mm, male, ruggedized
	R&S®ZNA50	2.4 mm, male, ruggedized
	R&S®ZNA67	1.85 mm, male, ruggedized
Frequency range	R&S®ZNA26	10 MHz to 26.5 GHz
	R&S®ZNA43	10 MHz to 43.5 GHz
	R&S®ZNA50	10 MHz to 50 GHz
	R&S®ZNA67	10 MHz to 67 GHz
Test port		selectable
DC block		standard
Number of points		2 to 100001
Resolution bandwidth (–3 dB)	1/1.5/2/3/5/7 steps	1 Hz to 1.5 MHz
R&S®ZNA-K1 cannot be combined with R&S®ZNA50-B312, R&S®ZNA67-B312, R&S®ZNA50-B511 and R&S®ZNA67-B511		

Standard configuration		**Base unit**	**Base unit + R&S®ZNAxx-B16 + R&S®ZNAxx-B3n**
		nom.	**nom.**
Noise level [20] at 1 kHz measurement bandwidth using RMS detector, normalized to 1 Hz, 10 dB IF gain	R&S®ZNA26, R&S®ZNA43, R&S®ZNA50 and R&S®ZNA67		
	10 MHz to 30 MHz	–100 dBm	–110 dBm
	30 MHz to 100 MHz	–110 dBm	–120 dBm
	100 MHz to 500 MHz	–125 dBm	–130 dBm
	500 MHz to 30 GHz	–132 dBm	–142 dBm
	30 GHz to 40 GHz	–130 dBm	–139 dBm
	40 GHz to 50 GHz	–118 dBm	–124 dBm
	50 GHz to 67 GHz	–115 dBm	–121 dBm

R&S®ZNA-K5 vector corrected converter measurements

Recommended setup and options	4-port R&S®ZNA + R&S®ZNA-K4 + R&S®ZNA-B5 + R&S®ZNA-B8 mmWave converter LO + R&S®ZN-ZM292 calibration mixer + calibration accessories

R&S®ZNA-K6 phase-coherent source control

Frequency range	R&S®ZNA26	10 MHz to 26.5 GHz
	R&S®ZNA43	10 MHz to 43.5 GHz
	R&S®ZNA50	10 MHz to 50 GHz
	R&S®ZNA67	10 MHz to 67 GHz
Phase accuracy at 0 dBm source level, 100 Hz measurement bandwidth	10 MHz to 10 GHz	0.1° (nom.)
	10 GHz to 30 GHz	0.2° (nom.)
	30 GHz to 50 GHz	0.3° (nom.)
	50 GHz to 67 GHz	0.4° (nom.)

R&S®ZNA-K7 measurements on pulsed signals

Bandwidth		1 Hz to 30 MHz [21]
Time resolution at resolution bandwidth	100 kHz	552 ns
	1.5 MHz	32 ns
	30 MHz	8 ns
Maximum number of acquired wave quantities	100 kHz	16
	1.5 MHz	16 (8) [22]
	30 MHz	4 (2) [22]

[20] The noise level is defined as the RMS value of the specified noise floor.

[21] Maximum bandwidth is limited to 1.5 MHz without R&S®ZNA-K17.

[22] Maximum number of acquired wave quantities is reduced without R&S®ZNA-B7.

R&S®ZNA-K8 mmWave converter support

Recommended setup and options	two mmWave converters with 2-port R&S®ZNA or four mmWave converters with 4-port R&S®ZNA + R&S®ZNA-K8 + R&S®ZNA-B8 + R&S®ZNA-B26 + R&S®ZCAKN (contains splitter and adapters) + accessories (test cables etc.)
Alternative setup and options	two mmWave converters with 4-port R&S®ZNA + R&S®ZNA-K8 + R&S®ZNAxx-B16 + R&S®ZCAKN (contains splitter and adapters) + accessories (test cables etc.)

R&S®ZNA-K9 group delay measurements

Allowable frequency aperture	30 MHz to 67 GHz	1 Hz to 50 MHz

Recommended setup and options	4-port R&S®ZNA + R&S®ZNAxx-B213 + R&S®ZNA-B5 + R&S®ZNA-K4 + R&S®ZNA-K9, 2-port R&S®ZNA + R&S®ZNAxx-B212 + R&S®ZNAxx-B52 + R&S®ZNA-K4 + R&S®ZNA-K9
Alternative setup and options	4-port R&S®ZNA + R&S®ZNA-K4 + R&S®ZNA-K9 + R&S®ZNAxx-Z9

R&S®ZNA-K30 noise figure measurement

Allowable noise receiver bandwidth	10 MHz to 250 MHz	200 kHz, 400 kHz, 1 MHz
	250 MHz to 67 GHz	200 kHz, 400 kHz, 1 MHz, 2 MHz, 4 MHz, 10 MHz, 20 MHz with R&S®ZNA-K17
Noise receiver gain settings, with R&S®ZNAxx-B302/-B312 low noise amplifier		high, medium, low, bypass; (see page 40 for detailed gain values)
Receiver noise figure, with R&S®ZNAxx-B302/-B312 low noise amplifier and reversed coupler configuration using R&S®ZNAxx-B16 direct source and receiver access option	100 MHz to 40 GHz	17 dB (meas.)
	40 GHz to 67 GHz	20 dB (meas)

Recommended setup and options, see additional application note 1SL378	use port 1 as driving and port 2 as receiving port + R&S®ZNAxx-B16 + R&S®ZNAxx-B21 + R&S®ZNAxx-B32 + R&S®ZNAxx-B161 + R&S®ZNAxx-B302 + diode power sensor (e.g. R&S®NRP40S), see Ordering information + accessories (test cables, fixed attenuators: 3 dB/6 dB/10 dB, etc.), see Ordering information

R&S®ZNA-K980 health and utilization monitoring service (HUMS) [23] [24]

Interfaces	protocols and interfaces supported for data readout and display	• SNMP (v1, v2c, v3) • REST (JSON) • SCPI • device web
Services	information provided	• device information (model, serial number, BIOS, date, time, system, HUMS and software information) • user-defined information tags (e.g. for asset management) • equipment information (hardware, options, software, licenses) • system operating status • instrument security information • service related information (due dates etc.) • mass storage related information • instrument utilization data • device history (event log)

[23] For details see application note under: www.rohde-schwarz.com/appnote/GFM336

[24] For use with common available asset management tools.

General data

Temperature loading		in line with IEC 60068-2-1 and IEC 60068-2-2
	operating temperature range	+5 °C to +40 °C
	storage temperature range	–20 °C to +60 °C
Damp heat		+40 °C at 85 % relative humidity, in line with IEC 60068-2-30
Maximum operating altitude	above sea level	4600 m (approx. 15100 ft)
Mechanical resistance	vibration, sinusoidal	5 Hz to 55 Hz, 0.15 mm constant amplitude, 55 Hz to 150 Hz, 0.5 g constant, in line with IEC 60068-2-6
	vibration, random	8 Hz to 500 Hz, acceleration 1.2 g (RMS), in line with IEC 60068-2-64
	shock	40 g shock spectrum, in line with MIL-STD-810E, method no. 516.4, procedure I
Calibration interval		1 year
EMC	RF emission	in line with CISPR 11/EN 55011 group 1 class A (for a shielded test setup); instrument complies with the emission requirements stipulated by EN 55011 and EN 61326-1 class A; This means that the instrument is suitable for use in industrial environments.
	immunity	in line with EMC Directive 2014/30/EU, including: IEC/EN 61326-1 (immunity test requirements for industrial environments, EN 61326 table 2), IEC/EN 61326-2-1, IEC/EN 61000-3-2, IEC/EN 61000-3-3
EU legislation	for details, see user documentation	EU: in line with Data Act – Regulation (EU) 2023/2854
Safety		in line with IEC 61010-1, EN 61010-1 and UL 61010-1, CSA C22.2 61010-1
Power supply		100 V to 240 V at 50 Hz to 60 Hz and 400 Hz, max. 7.3 A to 4.6 A (respectively)
Power consumption	2-port models	≤ 450 W (spec.), 300 W (typ.)
	4-port models	≤ 550 W (spec.), 350 W (typ.)
	standby	≤ 10 W (spec.)
Conformity marking		VDE, $_{C}$CSA$_{US}$, CE, KCC conformity mark
Dimensions	W × H × D	EIA RU1: 6 [25], 461.4 mm × 284.6 mm × 462.1 mm (18.2 in × 11.2 in × 18.2 in)
Weight	2-port models	24 kg (52.9 lb)
	4-port models	29 kg (63.9 lb)
Shipping weight	2-port models	30 kg (66.2 lb)
	4-port models	35 kg (77.2 lb)

[25] Electronics Industry Association rack units. 1 RU = 1.75 in.

Dimensions (in mm)

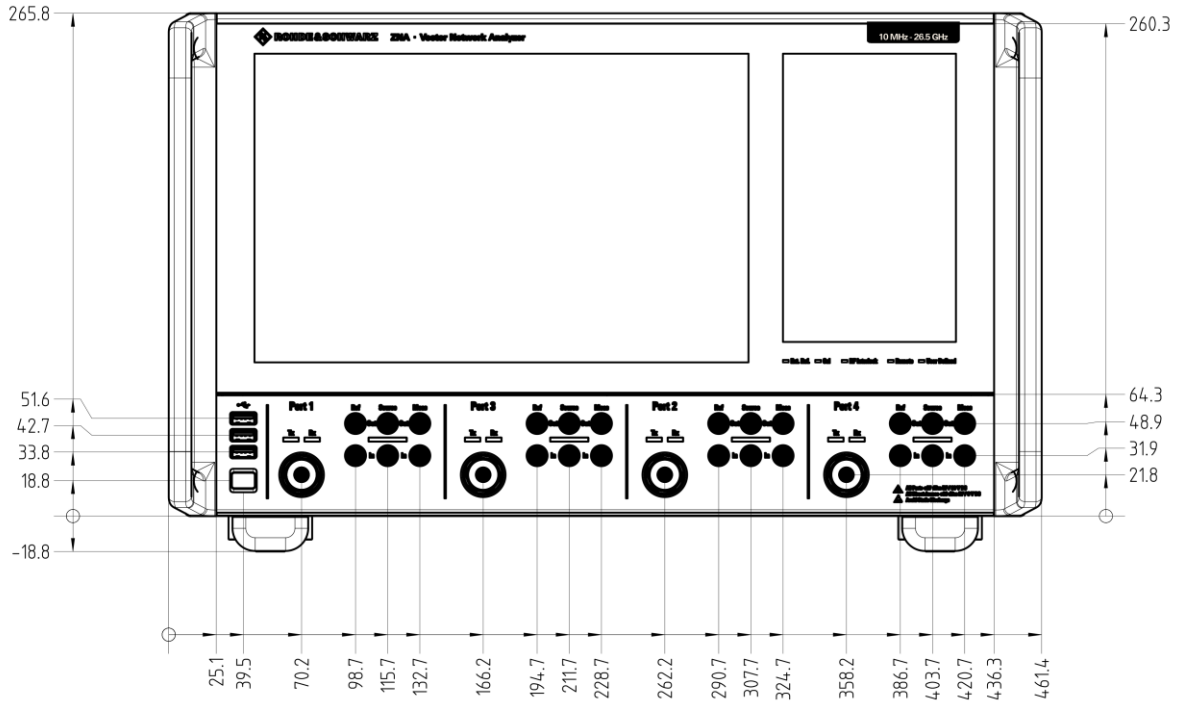

Front view of the R&S®ZNA

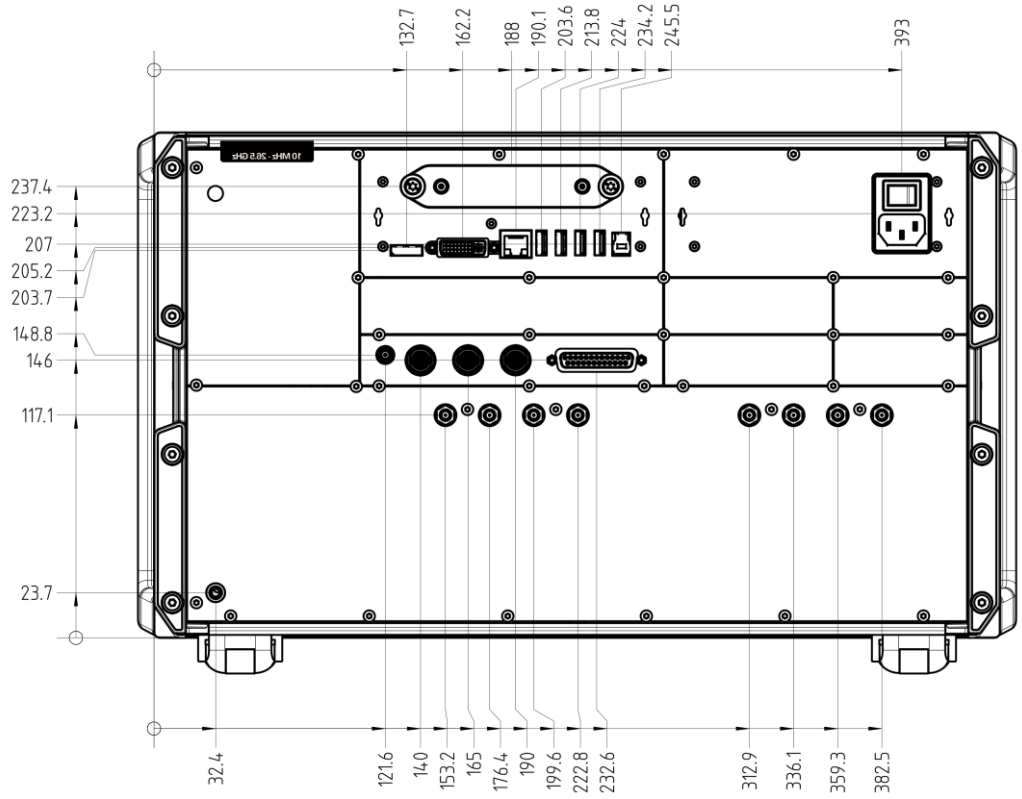

Rear view of the R&S®ZNA

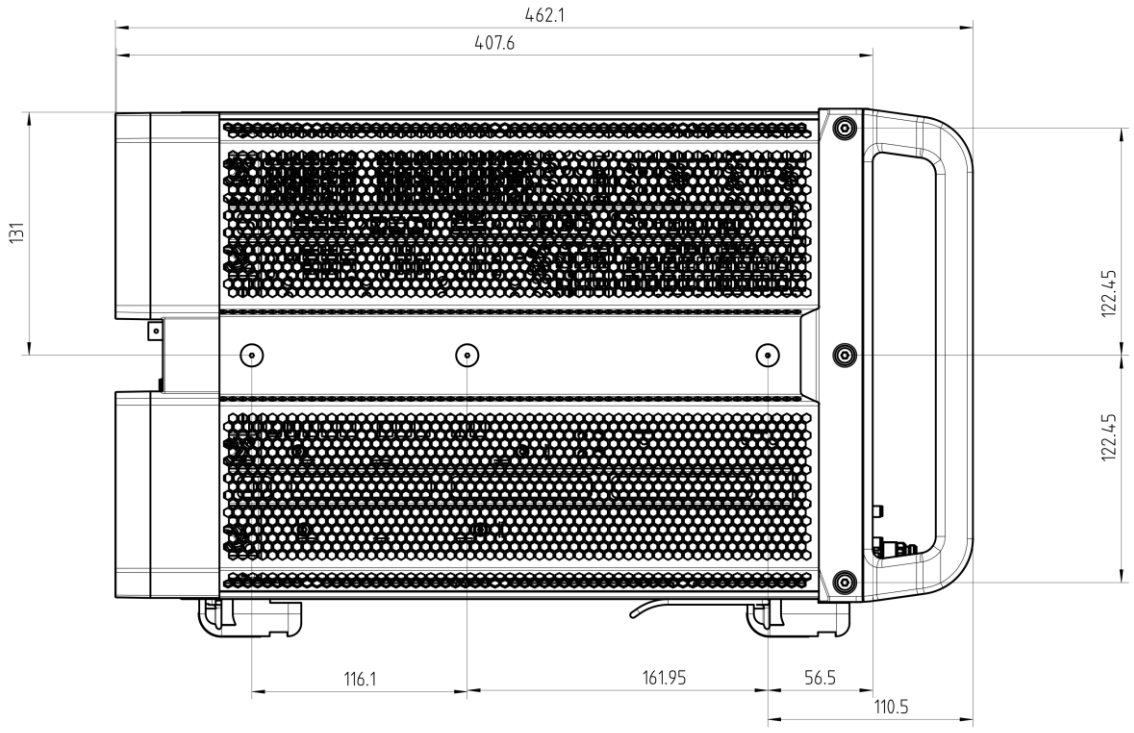

Side view of the R&S®ZNA

Ordering information

Designation	Type	Requires	Service center upgrade [26]	On-site upgrade [27]	Order No.
Base unit					
Vector network analyzer, 2 ports, 26.5 GHz, 3.5 mm connectors	R&S®ZNA26				1332.4500.22
Vector network analyzer, 4 ports, 26.5 GHz, 3.5 mm connectors	R&S®ZNA26				1332.4500.24
Vector network analyzer, 2 ports, 43.5 GHz, 2.92 mm connectors	R&S®ZNA43				1332.4500.42
Vector network analyzer, 4 ports, 43.5 GHz, 2.92 mm connectors	R&S®ZNA43				1332.4500.44
Vector network analyzer, 2 ports, 43.5 GHz, 2.4 mm connectors	R&S®ZNA43				1332.4500.43
Vector network analyzer, 4 ports, 43.5 GHz, 2.4 mm connectors	R&S®ZNA43				1332.4500.45
Vector network analyzer, 2 ports, 50 GHz, 2.4 mm connectors	R&S®ZNA50				1332.4500.52
Vector network analyzer, 4 ports, 50 GHz, 2.4 mm connectors	R&S®ZNA50				1332.4500.54
Vector network analyzer, 2 ports, 67 GHz, 1.85 mm connectors	R&S®ZNA67				1332.4500.62
Vector network analyzer, 4 ports, 67 GHz, 1.85 mm connectors	R&S®ZNA67				1332.4500.64
Options					
Direct source and receiver access					
Direct source and receiver access, for R&S®ZNA26	R&S®ZNA26-B16	2-port model	yes (U)		1332.4581.22
	R&S®ZNA26-B16	4-port model	yes (U)		1332.4581.24
Direct source and receiver access, for R&S®ZNA43	R&S®ZNA43-B16	2-port model	yes (U)		1332.4581.42
	R&S®ZNA43-B16	4-port model	yes (U)		1332.4581.44
Direct source and receiver access, for R&S®ZNA50	R&S®ZNA50-B16	2-port model	yes (U)		1332.4581.52
	R&S®ZNA50-B16	4-port model	yes (U)		1332.4581.54
Direct source and receiver access, for R&S®ZNA67	R&S®ZNA67-B16	2-port model	yes (U)		1332.4581.62
	R&S®ZNA67-B16	4-port model	yes (U)		1332.4581.64
Source step attenuators					
For R&S®ZNA26					
Source step attenuator, port 1	R&S®ZNA26-B21		yes (U)		1332.4630.21
Source step attenuator, port 2	R&S®ZNA26-B22		yes (U)		1332.4630.22
Source step attenuator, port 3	R&S®ZNA26-B23		yes (U)		1332.4630.23
Source step attenuator, port 4	R&S®ZNA26-B24		yes (U)		1332.4630.24
For R&S®ZNA43					
Source step attenuator, port 1	R&S®ZNA43-B21		yes (U)		1332.4646.21
Source step attenuator, port 2	R&S®ZNA43-B22		yes (U)		1332.4646.22
Source step attenuator, port 3	R&S®ZNA43-B23		yes (U)		1332.4646.23
Source step attenuator, port 4	R&S®ZNA43-B24		yes (U)		1332.4646.24
For R&S®ZNA50					
Source step attenuator, port 1	R&S®ZNA50-B21		yes (U)		1332.5007.21
Source step attenuator, port 2	R&S®ZNA50-B22		yes (U)		1332.5007.22
Source step attenuator, port 3	R&S®ZNA50-B23		yes (U)		1332.5007.23
Source step attenuator, port 4	R&S®ZNA50-B24		yes (U)		1332.5007.24
For R&S®ZNA67					
Source step attenuator, port 1	R&S®ZNA67-B21		yes (U)		1332.5013.21
Source step attenuator, port 2	R&S®ZNA67-B22		yes (U)		1332.5013.22
Source step attenuator, port 3	R&S®ZNA67-B23		yes (U)		1332.5013.23
Source step attenuator, port 4	R&S®ZNA67-B24		yes (U)		1332.5013.24

[26] Option may also be ordered at a later date; upgrade by Rohde & Schwarz service center. For upgrades, order the designated U option instead of the B option.

[27] Option may be installed by the user on site.

Designation	Type	Requires	Service center upgrade [26]	On-site upgrade [27]	Order No.
Receiver step attenuators					
For R&S®ZNA26					
Receiver step attenuator, port 1	R&S®ZNA26-B31		yes (U)		1332.4700.31
Receiver step attenuator, port 2	R&S®ZNA26-B32		yes (U)		1332.4700.32
Receiver step attenuator, port 3	R&S®ZNA26-B33		yes (U)		1332.4700.33
Receiver step attenuator, port 4	R&S®ZNA26-B34		yes (U)		1332.4700.34
For R&S®ZNA43					
Receiver step attenuator, port 1	R&S®ZNA43-B31		yes (U)		1332.4717.31
Receiver step attenuator, port 2	R&S®ZNA43-B32		yes (U)		1332.4717.32
Receiver step attenuator, port 3	R&S®ZNA43-B33		yes (U)		1332.4717.33
Receiver step attenuator, port 4	R&S®ZNA43-B34		yes (U)		1332.4717.34
For R&S®ZNA50					
Receiver step attenuator, port 1	R&S®ZNA50-B31		yes (U)		1332.5020.31
Receiver step attenuator, port 2	R&S®ZNA50-B32		yes (U)		1332.5020.32
Receiver step attenuator, port 3	R&S®ZNA50-B33		yes (U)		1332.5020.33
Receiver step attenuator, port 4	R&S®ZNA50-B34		yes (U)		1332.5020.34
For R&S®ZNA67					
Receiver step attenuator, port 1	R&S®ZNA67-B31		yes (U)		1332.5036.31
Receiver step attenuator, port 2	R&S®ZNA67-B32		yes (U)		1332.5036.32
Receiver step attenuator, port 3	R&S®ZNA67-B33		yes (U)		1332.5036.33
Receiver step attenuator, port 4	R&S®ZNA67-B34		yes (U)		1332.5036.34
Internal pulse modulators					
For R&S®ZNA26					
Internal pulse modulator, port 1	R&S®ZNA26-B41		yes	yes	1332.4775.41
Internal pulse modulator, port 2	R&S®ZNA26-B42		yes	yes	1332.4775.42
Internal pulse modulator, port 3	R&S®ZNA26-B43		yes	yes	1332.4775.43
Internal pulse modulator, port 4	R&S®ZNA26-B44		yes	yes	1332.4775.44
For R&S®ZNA43					
Internal pulse modulator, port 1	R&S®ZNA43-B41		yes	yes	1332.4781.41
Internal pulse modulator, port 2	R&S®ZNA43-B42		yes	yes	1332.4781.42
Internal pulse modulator, port 3	R&S®ZNA43-B43		yes	yes	1332.4781.43
Internal pulse modulator, port 4	R&S®ZNA43-B44		yes	yes	1332.4781.44
For R&S®ZNA50					
Internal pulse modulator, port 1	R&S®ZNA50-B41		yes	yes	1332.5088.41
Internal pulse modulator, port 2	R&S®ZNA50-B42		yes	yes	1332.5088.42
Internal pulse modulator, port 3	R&S®ZNA50-B43		yes	yes	1332.5088.43
Internal pulse modulator, port 4	R&S®ZNA50-B44		yes	yes	1332.5088.44
For R&S®ZNA67					
Internal pulse modulator, port 1	R&S®ZNA67-B41		yes	yes	1332.5094.41
Internal pulse modulator, port 2	R&S®ZNA67-B42		yes	yes	1332.5094.42
Internal pulse modulator, port 3	R&S®ZNA67-B43		yes	yes	1332.5094.43
Internal pulse modulator, port 4	R&S®ZNA67-B44		yes	yes	1332.5094.44
3rd and 4th internal sources					
3rd and 4th internal source, for R&S®ZNA26	R&S®ZNA26-B3	4-port model	yes		1332.4523.02
3rd and 4th internal source, for R&S®ZNA43	R&S®ZNA43-B3	4-port model	yes		1332.4617.02
3rd and 4th internal source, for R&S®ZNA50	R&S®ZNA50-B3	4-port model	yes		1332.4981.02
3rd and 4th internal source, for R&S®ZNA67	R&S®ZNA67-B3	4-port model	yes		1332.4998.02
Source monitor access					
Source monitor access port 1, for R&S®ZNA26	R&S®ZNA26-B161	R&S®ZNA26-B21	only 2-port model (U)		1332.4823.51
Source monitor access port 1 and port 3, for R&S®ZNA26	R&S®ZNA26-B163	4-port model, R&S®ZNA26-B21 and R&S®ZNA26-B23	yes (U)		1332.4823.53
Source monitor access port 1, for R&S®ZNA43	R&S®ZNA43-B161	R&S®ZNA43-B21	only 2-port model (U)		1332.4830.51
Source monitor access port 1 and port 3, for R&S®ZNA43	R&S®ZNA43-B163	4-port model, R&S®ZNA43-B21 and R&S®ZNA43-B23	yes (U)		1332.4830.53

Designation	Type	Requires	Service center upgrade [26]	On-site upgrade [27]	Order No.
Source monitor access port 1, for R&S®ZNA50	R&S®ZNA50-B161	R&S®ZNA50-B21	only 2-port model (U)		1332.5107.51
Source monitor access port 1 and port 3, for R&S®ZNA50	R&S®ZNA50-B163	4-port model, R&S®ZNA50-B21 and R&S®ZNA50-B23	yes (U)		1332.5107.53
Source monitor access port 1, for R&S®ZNA67	R&S®ZNA67-B161	R&S®ZNA67-B21	only 2-port model (U)		1332.5113.51
Source monitor access port 1 and port 3, for R&S®ZNA67	R&S®ZNA67-B163	4-port model, R&S®ZNA67-B21 and R&S®ZNA67-B23	yes (U)		1332.5113.53
Low-noise amplifiers					
Low-noise amplifier port 2, for R&S®ZNA26	R&S®ZNA26-B302	R&S®ZNA26-B16 and R&S®ZNA26-B32	yes		1332.5742.02
Low-noise amplifier port 2, for R&S®ZNA43	R&S®ZNA43-B302	R&S®ZNA43-B16 and R&S®ZNA43-B32	yes		1332.5759.02
Low-noise amplifier port 2, for R&S®ZNA50	R&S®ZNA50-B302	R&S®ZNA50-B16 and R&S®ZNA50-B32	yes		1332.5765.02
Low-noise amplifier port 2, for R&S®ZNA67	R&S®ZNA67-B302	R&S®ZNA67-B16 and R&S®ZNA67-B32	yes		1332.5771.02
Low-noise amplifier port 2, for R&S®ZNA50 (no export restriction)	R&S®ZNA50-B312	R&S®ZNA50-B16 and R&S®ZNA50-B32	yes		1332.5859.02
Low-noise amplifier port 2, for R&S®ZNA67 (no export restriction)	R&S®ZNA67-B312	R&S®ZNA67-B16 and R&S®ZNA67-B32	yes		1332.5865.02
Low-power spurious reduction					
Low-power spurious reduction port 1, for R&S®ZNA26	R&S®ZNA26-B501	R&S®ZNA26-B16, R&S®ZNA26-B31 and R&S®ZNA26-B16x	yes		1332.5220.11
Low-power spurious reduction port 1, for R&S®ZNA43	R&S®ZNA43-B501	R&S®ZNA43-B16, R&S®ZNA43-B31 and R&S®ZNA43-B16x	yes		1332.5236.11
Low-power spurious reduction port 1, for R&S®ZNA50	R&S®ZNA50-B501	R&S®ZNA50-B16, R&S®ZNA50-B31 and R&S®ZNA50-B16x	yes		1332.5242.11
Low-power spurious reduction port 1, for R&S®ZNA67	R&S®ZNA67-B501	R&S®ZNA67-B16, R&S®ZNA67-B31 and R&S®ZNA67-B16x	yes		1332.5259.11
Low-power spurious reduction port 1, for R&S®ZNA50 (no export restriction)	R&S®ZNA50-B511	R&S®ZNA50-B16, R&S®ZNA50-B31 and R&S®ZNA50-B16x	yes		1332.5671.02
Low-power spurious reduction port 1, for R&S®ZNA67 (no export restriction)	R&S®ZNA67-B511	R&S®ZNA67-B16, R&S®ZNA67-B31 and R&S®ZNA67-B16x	yes		1332.5688.02
Internal combiner					
Internal combiner port 1 and port 2, for R&S®ZNA26	R&S®ZNA26-B212	2-port model, R&S®ZNA26-B52, R&S®ZNA26-B21 and R&S®ZNA26-B22	yes		1332.5265.02
Internal combiner port 1 and port 2, for R&S®ZNA43	R&S®ZNA43-B212	2-port model, R&S®ZNA43-B52, R&S®ZNA43-B21 and R&S®ZNA43-B22	yes		1332.5271.02
Internal combiner port 1 and port 2, for R&S®ZNA50	R&S®ZNA50-B212	2-port model, R&S®ZNA50-B52, R&S®ZNA50-B21 and R&S®ZNA50-B22	yes		1332.5288.02
Internal combiner port 1 and port 2, for R&S®ZNA67	R&S®ZNA67-B212	2-port model, R&S®ZNA67-B52, R&S®ZNA67-B21 and R&S®ZNA67-B22	yes		1332.5294.02

Designation	Type	Requires	Service center upgrade [26]	On-site upgrade [27]	Order No.
Internal combiner port 1 and port 3, for R&S®ZNA26	R&S®ZNA26-B213	4-port model, R&S®ZNA26-B21 and R&S®ZNA26-B23	yes		1332.4846.13
Internal combiner port 1 and port 3, for R&S®ZNA43	R&S®ZNA43-B213	4-port model, R&S®ZNA43-B21 and R&S®ZNA43-B23	yes		1332.4869.13
Internal combiner port 1 and port 3, for R&S®ZNA50	R&S®ZNA50-B213	4-port model, R&S®ZNA50-B21 and R&S®ZNA50-B23	yes		1332.5042.13
Internal combiner port 1 and port 3, for R&S®ZNA67	R&S®ZNA67-B213	4-port model, R&S®ZNA67-B21 and R&S®ZNA67-B23	yes		1332.5065.13
Precision frequency reference (OCXO)	R&S®ZNA-B4		yes		1332.4530.02
2nd internal LO source	R&S®ZNA-B5	4-port model	yes	yes	1332.4675.02
2nd internal source and LO					
2nd internal source and LO, for R&S®ZNA26	R&S®ZNA26-B52	2-port model	yes		1332.6503.02
2nd internal source and LO, for R&S®ZNA43	R&S®ZNA43-B52	2-port model	yes		1332.6510.02
2nd internal source and LO, for R&S®ZNA50	R&S®ZNA50-B52	2-port model	yes		1332.6526.02
2nd internal source and LO, for R&S®ZNA67	R&S®ZNA67-B52	2-port model	yes		1332.6532.02
Data streaming memory	R&S®ZNA-B7		yes		1332.4546.02
mmWave converter LO	R&S®ZNA-B8	2-port model: R&S®ZNA-B26; 4-port model: R&S®ZNA-B26 or R&S®ZNA-B5	yes		1332.4652.02
Device control	R&S®ZNA-B12		yes		1332.4552.02
RFFE GPIO interface	R&S®ZNA-B15		yes		1332.4575.02
RFFE GPIO interface, including voltage/current measurement	R&S®ZNA-B15		yes		1332.4575.03
Additional removable hard disk	R&S®ZNA-B19	Windows 10 IoT Enterprise LTSB 2016 (1607)			1332.4600.02
Additional removable hard disk	R&S®ZNA-B19	Windows 10 IoT Enterprise LTSC 2021 (21H2)			1332.4600.03
Additional removable hard disk	R&S®ZNA-B19	Windows 11 IoT Enterprise LTSC 2024 (24H2)			1332.4600.04
Direct IF access	R&S®ZNA-B26		yes	yes	1332.4598.02
Trigger and control I/O board	R&S®ZNA-B91		yes		1332.4800.02
Spectrum analyzer mode	R&S®ZNA-K1		yes	yes	1332.5320.02
Time domain analysis (TDR)	R&S®ZNA-K2		yes	yes	1332.5336.02
Extended time domain analysis (including eye diagram)	R&S®ZNA-K20	R&S®ZNA-K2	yes	yes	1332.4746.02
Scalar mixer measurements, arbitrary frequency-converting measurements	R&S®ZNA-K4		yes	yes	1332.5342.02
Vector mixer measurements	R&S®ZNA-K5	see Options section for recommended setup	yes	yes	1332.5359.02
Phase coherent source control	R&S®ZNA-K6		yes	yes	1332.5413.02
True differential mode	R&S®ZNA-K61	R&S®ZNA-K6	yes	yes	1332.5442.02
Measurements on pulsed signals	R&S®ZNA-K7	R&S®ZNA-K17 together with pulse modulator [28]	yes	yes	1332.5371.02
Increased IF bandwidth 30 MHz	R&S®ZNA-K17		yes	yes	1332.5459.02
mmWave converter support	R&S®ZNA-K8	see Options section for recommended setup	yes	yes	1332.5388.02

[28] R&S®ZNAxx-B41/-B42/-B43/-B44 and/or R&S®ZNA-B91 (control of external pulse modulator). R&S®ZNA-B7 is recommended.

Designation	Type	Requires	Service center upgrade [26]	On-site upgrade [27]	Order No.
Group delay measurements on frequency converters without LO access	R&S®ZNA-K9	see Options section for recommended setup	yes	yes	1332.5394.02
1 mHz frequency resolution	R&S®ZNA-K19		yes	yes	1332.5513.02
Continuous data recording	R&S®ZNA-K28		yes	yes	1332.5613.02
Noise figure measurement	R&S®ZNA-K30	see Options section for recommended setup	yes	yes	1332.5465.02
Uncertainty analysis	R&S®ZNA-K50		yes	yes	1332.5542.02
Uncertainty analysis, pre-installed	R&S®ZNA-K50P				1332.5594.02
Security write protection	R&S®ZNA-K51				1332.5559.02
Speed improvement	R&S®ZNA-K66		yes	yes	1332.5820.02
SNP assistant	R&S®ZNA-K100		yes	yes	1338.9327.02
RF off boot up	R&S®ZNA-K121		yes	yes	1332.5736.02
EaZy deembedding	R&S®ZNA-K210		yes	yes	1339.3897.02
In-situ deembedding	R&S®ZNA-K220		yes		1339.3900.02
Smart fixture deembedding	R&S®ZNA-K230		yes		1339.3916.02
Delta-L PCB characterization	R&S®ZNA-K231		yes		1339.3922.02
Health and utilization monitoring service	R&S®ZNA-K980		yes	yes	1332.5607.02

Designation	Type	Order No.
Recommended calibration and verification accessories		
Calibration kits for manual calibration – high-end		
Calibration kit, 0 Hz to 26.5 GHz, 3.5 mm	R&S®ZN-Z235	1336.8500.02
Calibration kit, 0 Hz to 43.5 GHz, 2.92 mm	R&S®ZN-Z229	1336.7004.02
Calibration kit, 0 Hz to 50 GHz, 2.4 mm	R&S®ZN-Z224	1339.5002.02
Calibration kit, 0 Hz to 67 GHz, 1.85 mm	R&S®ZN-Z218	1337.3502.02
Calibration kit, 0 Hz to 110 GHz, 1.0 mm	R&S®ZN-Z210	1354.3407.02
Calibration units for automatic calibration – high-end		
Calibration unit, 9 kHz to 26.5 GHz, 2 ports, 3.5 mm (f)	R&S®ZN-Z50	1335.6904.32
Calibration unit, 100 kHz to 26.5 GHz, 4 ports, 3.5 mm (f)	R&S®ZN-Z52	1335.7046.30
Calibration unit, 100 kHz to 26.5 GHz, 2 ports, 3.5 mm (f)	R&S®ZN-Z53	1335.7046.32
Calibration unit, 9 kHz to 40 GHz, 2 ports, 2.92 mm (f), characterized to 43.5 GHz	R&S®ZN-Z54	1335.7117.92
Calibration unit, 9 kHz to 50 GHz, 2 ports, 2.4 mm (f)	R&S®ZN-Z55	1335.7181.42
Calibration unit, 10 MHz to 67 GHz, 2 ports, 1.85 mm (f)	R&S®ZN-Z156	1332.7239.03
Inline calibration units for automatic calibration		
CAN bus controller for inline calibration units	R&S®ZN-Z30	1328.7609.02
Inline calibration unit, 10 MHz to 40 GHz, characterized to 43.5 GHz	R&S®ZN-Z33	1328.7644.02
Inline calibration unit, 10 MHz to 40 GHz, for TVAC, characterized to 43.5 GHz	R&S®ZN-Z33	1328.7644.03
Thermal insulator 2.92 mm	R&S®ZN-Z391	1350.8504.02
Verification kits		
Verification kit, 45 MHz to 26.5 GHz, 3.5 mm	R&S®ZV-Z435	1319.1060.02
Verification kit, 45 MHz to 40.0 GHz, 2.92 mm	R&S®ZV-Z429	1319.1076.02
Verification kit, 45 MHz to 50.0 GHz, 2.4 mm	R&S®ZV-Z424	1319.1082.02
Comb generators		
Comb generator [29], 10 MHz to 44 GHz, 2.92 mm, female	R&S®ZN-ZCG44	1352.3000.44
Comb generator [29], 10 MHz to 67 GHz, 1.85 mm, female	R&S®ZN-ZCG67	1352.3000.67
Power sensors [30]		
Three-path diode power sensor, 10 MHz to 33 GHz, 3.5 mm	R&S®NRP33S	1419.0064.02
Three-path diode power sensor, 50 MHz to 40 GHz, 2.92 mm	R&S®NRP40S	1419.0041.02
Three-path diode power sensor, 50 MHz to 50 GHz, 2.4 mm	R&S®NRP50S	1419.0087.02
Three-path diode power sensor, 50 MHz to 67 GHz, 1.85 mm	R&S®NRP67S	1424.6396.02
Switch matrix and accessories		
Switch matrix, 26.5 GHz, 2 VNA ports to 6 test ports	R&S®ZN-Z86	1351.2216.02
Additional test ports 7 to 12, 2 VNA ports to 12 test ports	R&S®ZN-Z86-B22	1351.2900.22
Additional test ports 13 to 18, 2 VNA ports to 18 test ports [31]	R&S®ZN-Z86-B32	1351.2900.32
Additional test ports 19 to 24, 2 VNA ports to 24 test ports [32]	R&S®ZN-Z86-B42	1351.2900.42
Additional test ports 7 to 12, 4 VNA ports to 12 test ports	R&S®ZN-Z86-B24	1351.2900.24
Additional test ports 13 to 18, 4 VNA ports to 18 test ports [33]	R&S®ZN-Z86-B34	1351.2900.34
Additional test ports 19 to 24, 4 VNA ports to 24 test ports [34]	R&S®ZN-Z86-B44	1351.2900.44
Semi-rigid cable set for R&S®ZNA, 2.92 mm (f) to 2.92 mm (m), 2 or 4 R&S®ZNA ports to R&S®ZN-Z86, benchtop operation	R&S®ZN-ZA26	1328.8905.02
Mechanical matrix extension for the R&S®ZN-Z86	R&S®ZN-ZTBE	1351.3906.02
Test cables		
Test cables, 0 Hz to 26.5 GHz, 3.5 mm (f) to 3.5 mm (m)		
Length: 0.6 m	R&S®ZV-Z93	1301.7595.25
Length: 1 m	R&S®ZV-Z93	1301.7595.38
Test cables, 0 Hz to 26.5 GHz, 3.5 mm (f) to 3.5 mm (m)		
Length: 0.6 m	R&S®ZV-Z193	1306.4520.24
Length: 0.9 m	R&S®ZV-Z193	1306.4520.36
Length: 1.5 m	R&S®ZV-Z193	1306.4520.60
Test cables, 0 Hz to 40 GHz, 2.92 mm (f) to 2.92 mm (m)		
Length: 0.6 m	R&S®ZV-Z95	1301.7608.25
Length: 1 m	R&S®ZV-Z95	1301.7608.38
Test cables, 0 Hz to 40 GHz, 2.92 mm (f) to 2.92 mm (m)		
Length: 0.6 m	R&S®ZV-Z195	1306.4536.24
Length: 0.9 m	R&S®ZV-Z195	1306.4536.36

[29] Requires R&S®ZNA-B12 option for R&S®ZNA.

[30] See further power meters in the R&S®NRP specifications, PD 3607.0852.22.

[31] Requires R&S®ZN-Z86-B22.

[32] Requires R&S®ZN-Z86-B32.

[33] Requires R&S®ZN-Z86-B24.

[34] Requires R&S®ZN-Z86-B34.

Designation	Type	Order No.
Test cable, 0 Hz to 50 GHz, 2.4 mm (f) to 2.4 mm (m)		
Length: 0.6 m	R&S®ZV-Z97	1301.7637.25
Test cables, 0 Hz to 67 GHz, 1.85 mm (f) to 1.85 mm (m)		
Length: 0.6 m	R&S®ZV-Z196	1306.4559.24
Length: 0.9 m	R&S®ZV-Z196	1306.4559.36
Hardware add-ons		
Calibration mixer, 10 GHz to 40 GHz, 2.92 mm (f)	R&S®ZN-ZM292	1339.3800.02
Preamplifier, 10 MHz to 43 GHz, P_{out} = +20 dBm, 27 dB gain, 2.92 mm (f) to 2.92 mm (f)	R&S®ZN-ZSDM-PA	1702.6073.02
Preamplifier, 3 GHz to 67 GHz, P_{out} = +17 dBm, 27 dB gain, 1.85 mm (f) to 1.85 mm (f)	R&S®ZN-ZSDM-PA	1702.6073.03
2-way power divider, 40 GHz	R&S®ZN-Z1229	3691.8162.02
4-way power divider, 40 GHz	R&S®ZN-Z1230	3691.8179.02
mmWave adaption kit, for R&S®ZNA26/43, two converters	R&S®ZCAKN	1332.6178.43
mmWave adaption kit, for R&S®ZNA26/43, four converters	R&S®ZCAKN	1332.6178.44
mmWave adaption kit, for R&S®ZNA50/67, two converters	R&S®ZCAKN	1332.6178.67
mmWave adaption kit, for R&S®ZNA50/67, four converters	R&S®ZCAKN	1332.6178.68
Torque wrench, for 3.5/2.92/2.4/1.85 mm connector, 8 mm width, 0.9 Nm torque	R&S®ZTW	1328.8534.35
Torque wrench, for R&S®ZNA test port connector, 19 mm width, 0.9 Nm torque	R&S®ZTW	1328.8534.19
19" rack adapter	R&S®ZZA-KN6	1175.3056.00
Cable set, for R&S®ZNA-K9 (3.5 mm for R&S®ZNA26)	R&S®ZNA26-Z9	1332.4730.26
Cable set, for R&S®ZNA-K9 (2.92 mm for R&S®ZNA43)	R&S®ZNA43-Z9	1332.4730.43
Cable set, for R&S®ZNA-K9 (2.4 mm for R&S®ZNA43)	R&S®ZNA43-Z9	1332.4730.44
Cable set, for R&S®ZNA-K9 (1.85 mm for R&S®ZNA50)	R&S®ZNA50-Z9	1332.4730.50
Cable set, for R&S®ZNA-K9 (1.85 mm for R&S®ZNA67)	R&S®ZNA67-Z9	1332.4730.67

Warranty and service

Warranty		
Base unit		1 year
All other items		1 year
Service options		
	Service plans	**On demand**
Calibration	up to five years [35]	pay per calibration
Warranty and repair	up to five years [35]	standard price repair
Contact your Rohde & Schwarz sales office for further details.		

[35] For extended periods, contact your Rohde & Schwarz sales office.

Service at Rohde&Schwarz
You're in great hands
- Worldwide
- Local and personalized
- Customized and flexible
- Uncompromising quality
- Long-term dependability

Rohde&Schwarz
The Rohde&Schwarz technology group is among the trailblazers when it comes to paving the way for a safer and connected world with its leading solutions in test&measurement, technology systems and networks&cybersecurity. Founded more than 90 years ago, the group is a reliable partner for industry and government customers around the globe. The independent company is headquartered in Munich, Germany and has an extensive sales and service network with locations in more than 70 countries.

www.rohde-schwarz.com

Sustainable product design
- Environmental compatibility and eco-footprint
- Energy efficiency and low emissions
- Longevity and optimized total cost of ownership

Certified Quality Management
ISO 9001

Certified Environmental Management
ISO 14001

More Rohde&Schwarz certificates

Rohde&Schwarz training
www.training.rohde-schwarz.com

Rohde&Schwarz customer support
www.rohde-schwarz.com/support

R&S® is a registered trademark of Rohde&Schwarz GmbH&Co. KG
Trade names are trademarks of the owners
PD 5215.4652.22 | Version 24.00 | April 2026 (jr)
R&S®ZNA Vector Network Analyzer
Data without tolerance limits is not binding | Subject to change
© 2018 - 2026 Rohde&Schwarz | 81671 Munich, Germany